DIE & LOCATOR TOOLING GUIDE

500 Series

ALL WIRE MATERIAL BY WEIDNER

PICO CORPORATION

CRIMPING FACTS

HISTORY OF CRIMPING

Crimping may be defined as the art of joining a conductor to a contact by controlled compression and displacement of metal.

The first methods of crimping multi-pin connectors typically involved soldering the conductor to non-removable contacts. The advent of high temperature and serviceable removable contact applications, together with the need for simple and reliable field service led to crimping the conductor rather than being soldered.

Begining in the early sixties, a number of Military specifications have been introduced in order to define crimping tool standardization.

MIL-C-22520D is the culmination of these efforts, setting forth a single specification which determins the performance of crimp tools for use on military standard electrical contacts.

CRIMPING CHARACTERISTICS

Connectors utilizing crimping contacts usually permit the removal of these contacts several times so that modification, circuit changes, or replacement of contacts may be made with little difficulty and with the same quality assurance as in production line assembly.

Crimping may be accomplished either with hand tools, power tools, or automated power tools. Repeatability of the crimp operation is characteristic provided precision crimping tools are employed. These tools must be capable of being gaged to insure that proper crimp depths are maintained.

Inspection holes in each contact permit quality control personnel to view the wire strand ends thereby assuring that the conductor is properly positioned in the crimp barrel.

CRIMPING MECHANICS

The goal of a properly designed crimp is to produce a joint with electrical resistence equal to, or less than an equal section of wire. Additionally, the acheivement of high tensile strength (mechanical pull-out force) is desired. Both of these crimping characteristics are specified for various connectors in the MIL-C-22520D specification.

In a good crimp joint, there is a mutual metal flow causing symmetrical distortion of wire strands and contact material. The mil cross-sectional area is but slightly reduced and all voids are practically eliminated. Such a joint is similar to a cold weld. Mechanical strength and good electrical continuity are established. Because of the new environments to which electrical connectors are subjected, there has been a drastic change in thinking relative to the use of precision crimp joints in preference to solder.

CRIMPING CONFIGURATIONS

There are many different types of crimps employed today. These range from the terminal fold-over tab type of crimp to the single indent crimp, the dual indent crimp, the three indent crimp, hex crimps, and, finally, the MIL standard four indenter crimp. The four indenter crimp provides the most uniform displacement of wire and contact material. The wire strands and the contact material are formed together in a solid mass with little or no reduction of the mil area of the wire strands. A minimum of voids exists and very little extrusion of the wire strands has taken place.

The four indenter crimp principle has been used to produce a variety of impressions, the most common being the "bathtub" and "octadent" (also called double indent). The octadent configuration has been chosen by the Military for use in the M22520/1 and /2 tools.

CRIMP DEPTH DETERMINATION

Having resolved an indenter design, the determination of crimp depth range must be established for each application. There are many factors which contribute to the selection of the proper indenter setting. These are primarily related to contact material and dimensions as well as wire type and size.

The proper crimp depth for a given contact is the one that yields the best mechanical and electrical joint. To determine this setting, many contacts of the same type are crimped though a range of indenter settings from too loose to too tight. The crimped contacts are then subjected to tensile and voltage drop tests.

WIRE PREPARATION

Proper wire preparation also plays an important part in making a good crimp joint. There are two popular methods of wire stripping; mechanical and thermal. During the mechanical stripping process, extreme care must

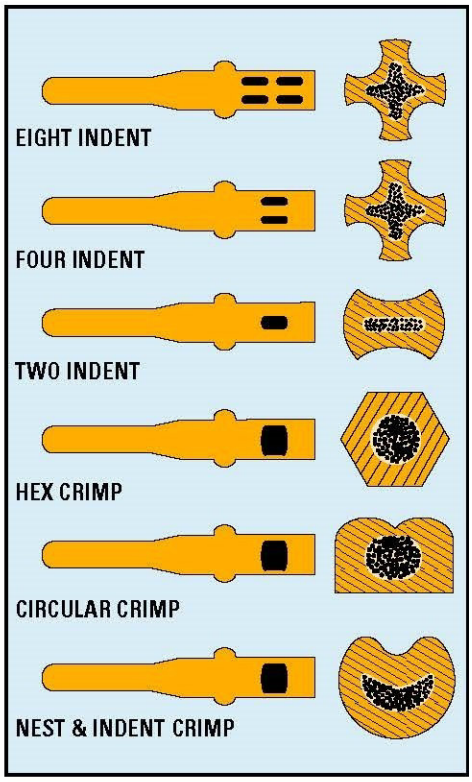

be taken to avoid nicking or removing wire strands, otherwise a loss of tensile strength will result. Conversely, if the insulation is not completely removed, erratic values may be obtained. Heat stripping eliminates the danger of nicking strands. However, depending on the type of insulation being stripped, too much heat can cause actual charring of the insulation or decompose the insulation with the evolution of corrosive gases which react with the conductor platings. There is also a possibility of local annealing of the conductor. Too little heat can deposit an insulation film which can act as a lubricant. Any of these conditions can affect tensile results. Wire preparation is, therefore, another area that requires control if proper tensiles are to be achieved with a wire-contact combination.

Before making a tensile test it is also important that the stripped length of the wire be checked to insure that the wire extends all the way into the contact wire barrel. During the tensile test it is necessary for the uncrimped end of the wire to be held in such a way that the pull force is evenly distributed to all the strands.

TENSILE TESTING

Tensile testing is a controlled pull test on the crimp joint to determine its mechanical strength. It is a destructive test which usually results in wire breakage in the crimped barrel, the wire pulling out of the crimped barrel, or wire breakage outside of the crimped area. The method and device used to conduct this test have a direct bearing on the results obtained. Per specification, the testing device pulls at the rate of one inch per minute. During the tensile test, the wire is elongating. The breakage or separation point, therefore is associated with not only the pull force but also the rate of increase of this force.

Tensile curves are plotted for each contact and wire combination. They will usually differ, depending on the type of wire, plating, size of wire, and variations in contact design and material. A desirable tensile range must be determined for each of these combinations.

MILLIVOLT DROP

Millivolt drop tests are performed across the crimp joint to determine the electrical characteristics. The test current is passed through the contacts and voltage drop is measured from a point on the shoulder of the contact to a point on the wire. Voltage drop values within the maximum allowable indicate a good electrical joint.

VISUAL INSPECTION

Each contact is inspected under a microscope to make certain the indenture does not crack or tear the base metal, or cause excessive distortion of the contact.

CONTROLLING CRIMP DEPTH

From the tensile curves a known crimp depth range is established. It is imperative, therefore, that the crimp tool settings be within the established tolerance.

To insure full closure of the tool handles and positive bottoming it is necessary that tools be cycle controlled. This is accomplished by the use of a precision ratchet device which releases the handles at the positive bottoming position within specification tolerances. This release point and positive bottoming are applicable to all contact sizes.

MEASURE CRIMP DEPTH (GAGING)

Too loose a crimp setting will result in wire pullout and high millivolt drop (high resistance). Too tight a setting will neck the wire strands causing low tensiles and wire breakage within the contact.

Positive bottoming tools can readily be gaged by selecting gage pins dimensioned to the end limits of the known crimp range of a given contact.

AXIAL DEFORMATION

During the crimping process considerable force is applied and material displacement takes place which may result in axial deformation of the contact. The following factors contribute to axial deformation of contacts:

- Contact material and contact hardness.
- Crimp pot wall thickness.
- Concentricity of conductor hole to O.D. of crimp barrel.
- If an insulation support is included on the contact, the concentricity of this support (I.D. and O.D.) with respect to the other diameters in the
- Crimp depth--the deeper the crimp the greater the possibility of contact bending. size of wire, bunching of strands, the lay of the conductors, plating or the use of solid conductor.
- The condition of the indenters--indenters which are not uniformly dimensioned or aligned or which have extreme variation in surface condition can cause contact bending.
- The condition of the crimping tool--a worn crimping tool can contribute to contact bending.
- Method of contact location and support--improperly supporting or positioning the contact in the tool can result in contact bending.
- Method of measuring axial deformation--we have found that this is one of the least understood items relating to the crimp tool specification.

CRIMPING FACTS

MIL-C-22520 is specific in defining and evaluating the axial deformation of contacts. This specification allows the following deformation:

Contact Size	Contact Deformation
20 & smaller	.011 TIR
16	.012 TIR
12	.012 TIR

The TIR allowed includes a maximum of.005 TIR assignable to the contact during its manufacture.

TIR is an abbreviation for Total Indicator Reading and is a measure of the total deviation from a true center line when the item being measured is rotated through 360ø.

COMPRESSION FORCES:

Crimping compression forces are directly related to: A: Indentor Configuration; B:The Amount of Leverage in a Crimping Tool; C: Crimp Depth Required for Satisfactory Results; D: Contact Hardness and Contact-Conductor Combinations.

A: Indentor Configuration MS drawings are specific as to indenter configuration of the Class I crimping tool. It is possible to change the shape of the indenters to reduce frontal area and thus reduce crimping forces. If the reduction of compression forces was the only factor involved, as knife blade edge on an indenter, or a conical tip shape would be the most desirable configuration. But this would result in cracked contacts, damage to plating, high wire embrittlement because of the concentrated stress of a small crimp area, and would also result in marginal tensile values.

B: The Amount of Leverage in a Crimping Tool Leverage or linkage systems could be devised to minimize the amount of crimp compression forces. Archimedes' old adage could apply here wherein he says, "Give me a place to stand and to rest my lever on and I can move the Earth." From a practical viewpoint, however, the geometry of Class I tools under MIL-T-22520 are specific in tool length and width.

C: Crimp Depth Required for Satisfactory Results Another way to reduce compression forces is to vary crimp depth. It is understandable that the less the indenters indent the lower the compression forces involved. On the other hand, if the tool does not indent as deeply as specified, the possibility exists that submarginal or marginal tensile values will result.

D: Contact Hardness and Contact-Conductor Combinations Contact material is definitely a factor contributing to high compression forces. Some contacts are made of hard material; some contacts have thick walls and some contacts are required to cover a range of conductors, all of which could involve high crimping forces. It is felt that an analysis of these conditions and an attempt to make them compatible with the crimping tool could facilitate the reduction of compression forces.

As can be seen from this brief review of crimping, many factors influence the effectiveness of a crimped joint. However, a good crimping tool compensates for many of these factors by providing proper crimp depths resulting in termination having high tensile strength, low millivolt drop, and minimum contact deformation. With the use of a well-engineered tool, crimping becomes one of the most reliable methods of wire termination.

CONTACT APPLICATIONS

TYPICAL CONTACT-TERMINAL APPLICATIONS

Both model 400 & 500 series accommodate insulated and non insulated Ring, Spade and Forked Terminals from 26-24 gage thru 250 MCM, wire range 28 gage thru 250 MCM. Refer to specification charts for individual models.

These series also accept Flag, Right Angle, Quick connects, In-line Splice, End caps and Battery Terminals.

Models within this series accept #23 thru 4/0 Pin and Socket Contacts, and #28 thru 4/0 wire.

Coaxial applications and wire ferrules are also accommodated.

Refer to specification charts for model applications.

Many dies are available for special electrical and non-electrical applications. Contact Pico for your application needs.

CRIMPING CONFIGURATIONS

There are many different types of crimps employed today. Both Series 400 & 500 tools are capable of producing a number of crimp configurations, ranging from 4-indent, 8-indent, Hex, Circular, Square and a variety of others.

The indentor crimp principle has been used to produce a variety of impressions, the most common being the "bathtub" and "octadent" (Eight Indentor Crimp).

The 8-indent configuration has been chosen by the Military for use in the M22520/23 tools.

4 Indent

Hex

Two Indent

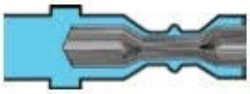

8 Indent - Cross Section

Circular

B Crimp

Nest & Indent Crimp

Square

CONTACT APPLICATIONS

INSULATED TERMINALS (IT) | NON–INSULATED TERMINALS (NIT)

There are three basic methods used in the manufacture of closed barrel style solderless terminals, These variations affect the selection of proper die assemblies and locators.

A: Terminal made from Flat Stock:

Flat stock terminals have a greater wall thickness then tube stock, solid stock or cold headed. Forming of flat stock into a round crimp barrel results in a seam down the longitudinal axis of the barrel. This seam is usually brazed. The die sets used with terminals, which have a seam, have a concave profile on the indenter that is aligned with the seam. The purpose of this concave profile is to capture the seam and prevent separation during the crimp process. There are several manufacturers of flat stock terminals. Among them are Amp, ETC, 3M, Ideal and Wearnes Hollingsworth Corp.

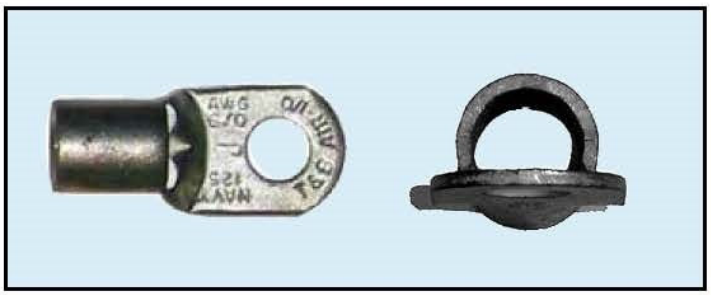

Non-Insulated Terminal - Flat Stock

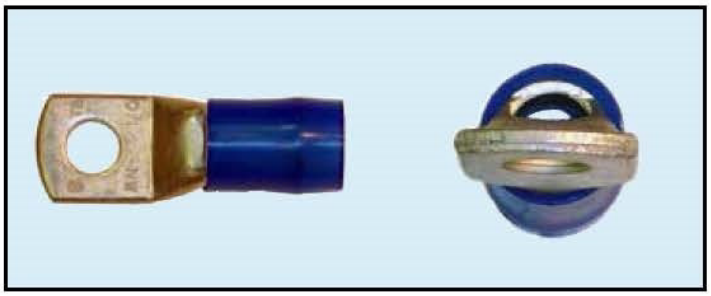

Insulated Terminal - Flat Stock

B: Terminals made from Tube Stock:

Burndy and Thomas and Betts manufacture terminals in smaller sizes using both flat and tube stock (22-18 thru 12-10), Larger sizes are made from tube stock (8 thru 2/0). All four indentors in the die sets used with tube stock terminals are the same and produce four symmetrical indentations. These die sets are identified with a " -B " suffix.

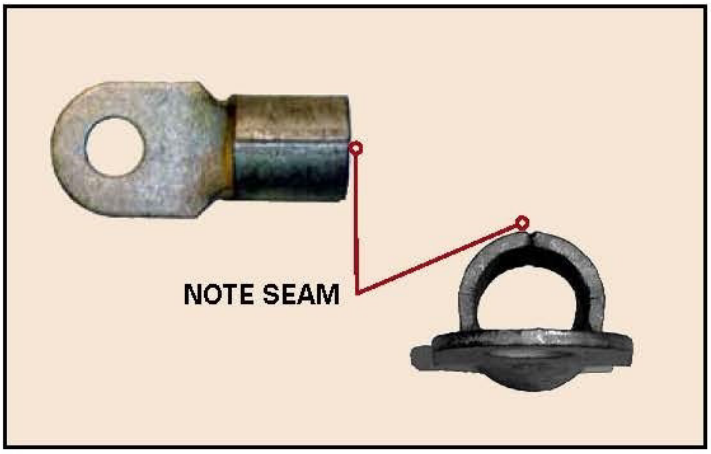

Non-Insulated Terminal - Tube Stock

NOTES

A. In most cases the same locator will perform satisfactorily for **IT INSULATED** and **NIT NON-INSULATED** terminals, but a locator for a **TUBE** stock terminal will not work with a **FLAT** stock terminal.

B. Special dies and locators are available for flag and right angle terminals. If you are in doubt, please contact Pico Corporation.

Contact Pico Corporation for proper die assemblies and locators for these terminal styles.

PICO CORPORATION

500 SERIES PNEUMATIC CRIMPING TOOL

MULTI INDENT • CYCLE CONTROLLED • MEETS PERFORMANCE REQUIREMENTS OF MIL-C-22520

Patent No. 3,173,341 & 3,201,969

The most versatile crimping tool available today.

Models 500-EC, 500-D, 500-DEC and 500-D-1 are available from stock to handle No. 22 through 250 MCM.

Standard factory air pressure 80-125 psi (5-8.6 BAR) is now sufficient for all sizes.

Model 500 has the same safety cycling feature that is built into all of the Pico line of quality tools.

Optional **EC kit** available for models 500-D & 500-D-1. EC kit replaces internal valve system, decreasing cycle time from 8 sec/cycle to 2.5 sec/cycle.

Human engineered to prevent accidents.

For more information contact Pico or visit web: **www.picotools.com**

Features

- Pneumatic - Full Cycle
- Pin & Sockets, Solderless Terminals
- Crimps No. 22 thru 250 MCM
- Variety of Crimp Styles
- Interchangeable, Nonadjustable Die Heads
- No Operator Adjustments required
- Precision +.001/-.001"
- Operates on Shop Air 80-125 PSI (5-8.6 BAR)
- Series 500: 31-39 lbs (14-17.7 kg)

INSULATED/NON-INSULATED TERMINALS & SPLICES

PIN & SOCKET CONTACTS

EC KIT

EC kit replaces internal valve system, decreasing cycle time over stock configuration, resulting in increased production rates.

Available as optional accessory for series 400, 400-BHD, 400-B-1, and series 500-D & 500-D-1.

Includes foot pedal.

SERIES MODEL	400	500
CYCLETIME		
WIHTOUT EC	3 sec	8 sec
WITH EC	1.5 sec	3 sec

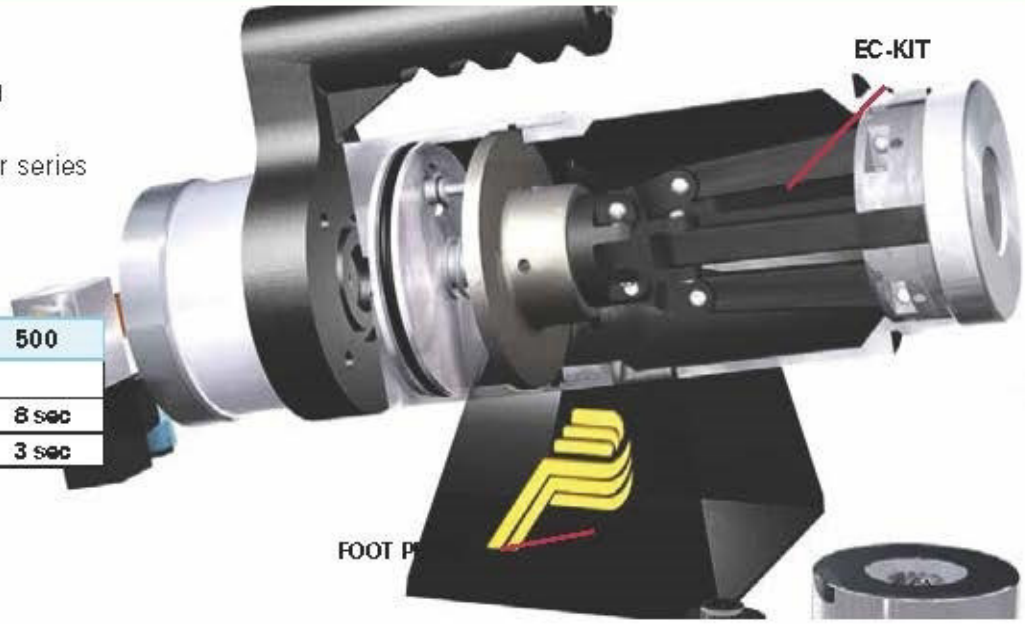

ACCESSORIES

Several optional accessories are available, including:

Foot Pedal provides operator comfort and increased productin speed with foot pedal cycle trigger.

Gaging tools, including Go No-Go gages for die calibration.

Portable Field Kit provides mobile power unit for field and in-plant applications. Kit includes CO_2 air tank - up to 400 crimps on a charge.

Contact Pico for additional details.

PORTABLE FIELD KIT

GO NO-GO GAGES

FOOT PEDAL

SPECIFICATIONS

APPLICATIONS	500-EC	500-D 500-D-EC	500-D-1 500-D-1-EC
CONTACTS			
PINS SOCKETS	20 thru 4/0	20 thru 4/0	20 thru 4/0
SOLDERLESS TERMINALS			
INSULATED	22 thru 1/0	22 thru 3/0	22 thru 4/0
UNINSULATED	26-24 thru 2/0	26-24 thru 4/0	22 thru 250 MCM
COAXIAL APPLICATIONS	MAX. DIA.	MAX. DIA.	MAX. DIA.
CONTACTS CONNECTORS	1.5 (3.8 cm)	1.5 (3.8 cm)	1.5 (3.8 cm)
WEIGHT	31 lb (14 kg)	35 lb (16 kg)	39 lb (17.7 kg)
LENGTH (no bench mt)	15 in length 381 mm	18 in length 457 mm	21 in length 533 mm

CRIMPING CONFIGURATIONS

4 Indent | Hex | Two Indent | 8 Indent Cross Section

Circular | B Crimp | Nest & Indent Crimp | Square

500 SERIES STANDARD DIE APPLICATIONS

STANDARD DIES*		500-EC	500-D 500-D-EC	500-D-1 500-D-1-EC
514DA-20N	Pins & Sockets	Yes	Yes	Yes
514DA-16N	Pins & Sockets	Yes	Yes	Yes
514DA-12N	Pins & Sockets	Yes	Yes	Yes
514DA-8N	Pins & Sockets	Yes	Yes	Yes
514DA-6N	Pins & Sockets	Yes	Yes	Yes
514DA-4N	Pins & Sockets	Yes	Yes	Yes
514DA-2N	Pins & Sockets	Yes	Yes	Yes
514DA-1/0N	Pins & Sockets	Yes	Yes	Yes
514DA-2/ON	Pins & Sockets	Yes	Yes	Yes
514DA-4/ON-1	Pins & Sockets	Yes	Yes	Yes
514DA-16-14-IT	Insulated Terminals	Yes	Yes	Yes
514DA-12-10-IT	Insulated Terminals	Yes	Yes	Yes
514DA-8IT	Insulated Terminals	Yes	Yes	Yes
514DA-6IT	Insulated Terminals	Yes	Yes	Yes
514DA-4IT	Insulated Terminals	Yes	Yes	Yes
514DA-2IT	Insulated Terminals	Yes	Yes	Yes
514DA-1/O-IT	Insulated Terminals	Yes	Yes	Yes
514DA-2/O-IT	Insulated Terminals	Yes	Yes	Yes
514DA-3/O-IT	Insulated Terminals	Yes	Yes	Yes
514DA-4/O-IT	Insulated Terminals	No	Yes	Yes
514DA-250 MCM IT	Insulated Terminals	No	Yes	Yes
514DA-16-14-NIT	Non-Insulated Terminals	Yes	Yes	Yes
514DA-12-10-NIT	Non-Insulated Terminals	Yes	Yes	Yes
514DA-8NIT	Non-Insulated Terminals	Yes	Yes	Yes
514DA-6NIT	Non-Insulated Terminals	Yes	Yes	Yes
514DA-4NIT	Non-Insulated Terminals	Yes	Yes	Yes
514DA-2NIT	Non-Insulated Terminals	Yes	Yes	Yes
514DA-1/0-NIT	Non-Insulated Terminals	Yes	Yes	Yes
514DA-2/0-NIT	Non-Insulated Terminals	Yes	Yes	Yes
514DA-3/0-NIT	Non-Insulated Terminals	Yes	Yes	Yes
514DA-4/0-NIT	Non-Insulated Terminals	No	Yes	Yes
514DA-250 MCM NIT	Non-Insulated Terminals	No	No	Yes

MS TERMINALS

MS P/N	IT/NIT	SIZE	GROUP 1		T & B		BURNDY	
			DIE P/N	LOC	DIE P/N	LOC	DIE P/N	LOC
MS20659-107	NIT	8	514DA-8NIT	5502	514DA-8NIT	5502-3	514DA-8NIT	5502-1
MS20659-108	NIT	8	514DA-8NIT	5502	514DA-8NIT	5502-3	514DA-8NIT	5502-1
MS20659-109	NIT	6	514DA-6NIT	5503	514DA-6NIT	5503-3	514DA-6NIT	5503-1
MS20659-110	NIT	6	514DA-6NIT	5503	514DA-6NIT	5503-3	514DA-6NIT	5503-1
MS20659-112	NIT	4	514DA-4NIT	5504	514DA-4NIT	5504-3	514DA-4NIT	5504-1
MS20659-113	NIT	2	514DA-2NIT	5505	514DA-2NIT	5505-3	514DA-2NIT	5505-1
MS20659-114	NIT	2	514DA-2NIT	5505	514DA-2NIT	5505-3	514DA-2NIT	5505-1
MS2065 9-117	NIT	0	514DA-0NIT	5510-2	514DA-0NIT	5510-3	514DA-0NIT	5510-1
MS20659-118	NIT	0	514DA-0NIT	5510-2	514DA-0NIT	5510-3	514DA-0NIT	5510-1
MS20659-119	NIT	2/0	514DA-2/0NIT	5520-2	514DA-2/0NIT	5520-3	514DA-2/0NIT	5520-1
MS20659-120	NIT	2/0	514DA-2/ONIT	5520-2	514DA-2/ONIT	5520-3	514DA-2/ONIT	5520-1
MS20659-121	NIT	3/0	514DA-3/0NIT	5530-2	514DA-3/0NIT	5530-3	514DA-3/0NIT	5530-1
MS20659-121)	NIT	3/0	514DA-3/ONIT	5530-2	514DA-3/ONIT	5530-3	514DA-3/ONIT	5530-1
MS20659-122	NIT	3/0	514DA-3/0NIT	5530-2	514DA-3/0NIT	5530-3	514DA-3/0NIT	5530-1
MS20659-122)	NIT	3/0	514DA-3/ONIT	5530-2	514DA-3/ONIT	5530-3	514DA-3/ONIT	5530-1
MS20659-123	NIT	3/0	514DA-3/ONIT	5530-2	514DA-3/ONIT	5530-3	514DA-3/ONIT	5530-1
MS20659-123	NIT	4/0	514DA-4/0NIT	5540-2	514DA-4/0NIT	5540-3	514DA-4/0NIT	5540-1
MS20659-124	NIT	4/0	514DA-4/0NIT	5540-2	514DA-4/0NIT	5540-3	514DA-4/0NIT	5540-1
MS20659-124)	NIT	4/0	514DA-4/ONIT	5540-2	514DA-4/ONIT	5540-3	514DA-4/ONIT	5540-1
MS20659-129	NIT	8	514DA-8NIT	5502	514DA-8NIT	5502-3	514DA-8NIT	5502-1
MS20659-130	NIT	6	514DA-6NIT	5503	514DA-6NIT	5503-3	514DA-6NIT	5503-1
MS20659-131	NIT	6	514DA-6NIT	5503	514DA-6NIT	5503-3	514DA-6NIT	5503-1
MS20659-132	NIT	4	514DA-4NIT	5504	514DA-4NIT	5504-3	514DA-4NIT	5504-1
MS20659-133	NIT	2	514DA-2NIT	5505	514DA-2NIT	5505-3	514DA-2NIT	5505-1
MS20659-135	NIT	0	514DA-ONIT	5510-2	514DA-ONIT	5510-3	514DA-ONIT	5510-1
MS20659-136	NIT	2/0	514DA-2/ONIT	5520-2	514DA-2/ONIT	5520-3	514DA-2/ONIT	5520-1
MS20659-137	NIT	4/0	514DA-4/0NIT	5540-2	514DA-4/0NIT	5540-3	514DA-4/0NIT	5540-1
MS20659-137)	NIT	4/0	514DA-4/ONIT	5540-2	514DA-4/ONIT	5540-3	514DA-4/ONIT	5540-1
MS20659-140	NIT	8	514DA-8NIT	5502	514DA-8NIT	5502-3	514DA-8NIT	5502-1
MS20659-141	NIT	8	514DA-8NIT	5502	514DA-8NIT	5502-3	514DA-8NIT	5502-1
MS20659-141	NIT	8	514DA-8NIT	5502	54DA-8NIT-B	5502	514DA-8NIT-B	5502-1
MS20659-142	NIT	8	514DA-8NIT	5502	514DA-8NIT	5502-3	514DA-8NIT	5502-1
MS20659-143	NIT	6	514DA-6NIT	5503	514DA-6NIT	5503-3	514DA-6NIT	5503-1
MS20659-144	NIT	4	514DA-4NIT	5504	514DA-4NIT	5504-3	514DA-4NIT	5504-1
MS20659-145	NIT	4	514DA-4NIT	5504	514DA-4NIT	5504-3	514DA-4NIT	5504-1
MS20659-146	NIT	2	514DA-2NIT	5505	514DA-2NIT	5505-3	514DA-2NIT	5505-1
MS20659-147	NIT	2	514DA-2NIT	5505	514DA-2NIT	5505-3	514DA-2NIT	5505-1
MS20659-148	NIT	2	514DA-2NIT	5505	514DA-2NIT	5505-3	514DA-2NIT	5505-1
MS20659-151	NIT	0	514DA-ONIT	5510-2	514DA-ONIT	5510-3	514DA-ONIT	5510-1

MS TERMINALS

MS P/N	IT/NIT	SIZE	GROUP 1		T & B		BURNDY	
			DIE P/N	LOC	DIE P/N	LOC	DIE P/N	LOC
MS20659-152	NIT	0	514DA-ONIT	5510-2	514DA-ONIT	5510-3	514DA-ONIT	5510-1
MS20659-153	NIT	2/0	514DA-2/0NIT	5520-2	514DA-2/0NIT	5520-3	514DA-2/0NIT	5520-1
MS20659-154	NIT	2/0	514DA-2/ONIT	5520-2	514DA-2/ONIT	5520-3	514DA-2/ONIT	5520-1
MS20659-155	NIT	3/0	514DA-3/0NIT	5530-2	514DA-3/0NIT	5530-3	514DA-3/0NIT	5530-1
MS20659-155)	NIT	3/0	514DA-3/ONIT	5530-2	514DA-3/ONIT	5530-3	514DA-3/ONIT	5530-1
MS20659-156	NIT	3/0	514DA-3/0NIT	5530-2	514DA-3/0NIT	5530-3	514DA-3/0NIT	5530-1
MS20659-156)	NIT	3/0	514DA-3/ONIT	5530-2	514DA-3/ONIT	5530-3	514DA-3/ONIT	5530-1
MS20659-157	NIT	4/0	514DA-4/0NIT	5540-2	514DA-4/0NIT	5540-3	514DA-4/0NIT	5540-1
MS20659-158	NIT	4/0	514DA-4/0NIT	5540-2	514DA-4/0NIT	5540-3	514DA-4/0NIT	5540-1
MS20659-159	NIT	4/0	514DA-4/0NIT	5540-2	514DA-4/0NIT	5540-3	514DA-4/0NIT	5540-1
MS20659-160	NIT	4/0	514DA-4/0NIT	5540-2	514DA-4/0NIT	5540-3	514DA-4/0NIT	5540-1
MS25036-115	IT	8	514DA-8IT	5502	514DA-8IT	5502-3	514DA-8IT	5502-1
MS25036-116	IT	8	514DA-8IT	5502	514DA-8IT	5502-3	514DA-8IT	5502-1
MS25036-117	IT	8	514DA-8IT	5502	514DA-8IT	5502-3	514DA-8IT	5502-1
MS25036-118	IT	8	514DA-8IT	5502	514DA-8IT	5502-3	514DA-8IT	5502-1
MS25036-119	IT	6	514DA-6IT	5503	514DA-6IT	5503-3	514DA-6IT	5503-1
MS25036-120	IT	6	514DA-6IT	5503	514DA-6IT	5503-3	514DA-6IT	5503-1
MS25036-122	IT	6	514DA-6IT	5503	514DA-6IT	5503-3	514DA-6IT	5503-1
MS25036-123	IT	4	514DA-4IT	5504	514DA-4IT	5504-3	514DA-4IT	5504-1
MS25036-124	IT	4	514DA-4IT	5504	514DA-4IT	5504-3	514DA-4IT	5504-1
MS25036-126	IT	2	514DA-2IT	5505	514DA-2IT	5505-3	514DA-2IT	5505-1
MS25036-127	IT	2	514DA-2IT	5505	514DA-2IT	5505-3	514DA-2IT	5505-1
MS25036-128	IT	2	514DA-2IT	5505	514DA-2IT	5505-3	514DA-2IT	5505-1
MS25036-132	IT	0	514DA-0IT	5510-2	514DA-0IT	5510-3	514DA-0IT	5510-1
MS25036-133	IT	0	514DA-0IT	5510-2	514DA-0IT	5510-3	514DA-0IT	5510-1
MS25036-134	NIT	0	514DA-0IT	5510-2	514DA-0IT	5510-3	514DA-0IT	5510-1
MS25036-135	NIT	2/0	514DA-2/0IT	5520-2	514DA-2/0IT	5520-3	514DA-2/0IT	5520-1
MS25036-136	NIT	2/0	514DA-2/0IT	5520-2	514DA-2/0IT	5520-3	514DA-2/0IT	5520-1
MS25036-137	NIT	2/0	514DA-2/0IT	5520-2	514DA-2/0IT	5520-3	514DA-2/0IT	5520-1
MS25036-138	NIT	3/0	514DA-3/0IT	5530-2	514DA-3/0IT	5530-3	514DA-3/0IT	5530-1
MS25036-139	NIT	3/0	514DA-3/0IT	5530-2	514DA-3/0IT	5530-3	514DA-3/0IT	5530-1
MS25036-140	NIT	4/0	514DA-4/0IT	5540-2	514DA-4/0IT	5540-3	514DA-4/0IT	5540-1
MS25036-141	NIT	4/0	514DA-4/0IT	5540-2	514DA-4/0IT	5540-3	514DA-4/0IT	5540-1
		6	514DA-6IT	5503	514DA-6IT	5503-3	514DA-6IT	5503-1

MANUFACTUER REFERENCE

MANF P/N	MANUFACTURER	P/S/T	SIZE	DIE P/N	LOC P/N
4/0 PIN	MARVIN LAND	PIN	4/0	.620-625 CIRCULAR	10708 SPG
1/0EJST60-10	JST	NIT-F	1/0	10017	
TF40G	KALAS	NIT-F	1/0	10017	
2/0EJST70-10	JST	NIT-F	2/0	10018	
TF30G	KALAS	NIT-F	2/0	10018	
D6009-1104	Dynacraft	NIT	4/0	10047-1	
D6009-1195	Dynacraft	NIT	4/0	10047-2	
D6009-1085	Dynacraft	NIT	4/0	10047-3	
D6009-1098	Dynacraft	NIT	4/0	10047-3	
D6009-1078	Dynacraft	NIT	2/0	10048-1	
D6009-1072	Dynacraft	NIT	2/0	10048-2	
D6009-1156	Dynacraft	NIT	2/0	10048-3	
D6009-1117	Dynacraft	NIT	1/0	10049-1	
D6009-1033	Dynacraft	NIT	1/0	10049-2	
D6009-1601	Dynacraft	NIT	1/0	10049-3	
D6009-1115	Dynacraft	NIT	1/0	10050-1	
SYM 0NITTERM	SYMETRY ELECTRONICS	T		10124	
SYM 0NIT BATT	SYMETRY ELECTRONICS	T		10125 SPG	
10-838007	Amphenol-Bendix	PIN	14MM	10645	10645
10-838078-001	Amphenol-Bendix	SKT	0	10664	
10-838078-002	Amphenol-Bendix	SKT	0	10664	
10-838078-003	Amphenol-Bendix	SKT	0	10664	
10-838078-004	Amphenol-Bendix	SKT	0	10664	
10-838078-005	Amphenol-Bendix	SKT	0	10664	
40015	Hollingsworth	DIE	8 NIT	40015	40015-1
40016	Hollingsworth	Die	6 NIT	40016	40016-1
40017	Hollingsworth	Die	4 NIT	40017	40017-1
M39029/30-220	MIL SPEC	SKT	# 8	5114DA-8N	5400
323166	Amp-Tyco	NIT	8	514-DA-8 NIT	5502
320-1070	Anderson	PIN	70MM	514514DA-2/0NITDA-2/0N	10670-3
2/0 P & S Contact	TRI-STAR	P/S		514DA 2/0-D	5401
1011X-125-013 P)	G & HTECHNOLOGY	PIN	0	514DA-0 HEX	5440-4 or 5475
1011X-910-001 S)	G & HTECHNOLOGY		0	514DA-0 HEX	5440-4 or 5475
19193-020	Molex	NIT	1/0	514DA-0 NIT	5510-2
19193-0330	Molex	NIT	1/0	514DA-0 NIT	5510-2
19193-0331	Molex	NIT	1/0	514DA-0 NIT	5510-2
19193-0333	Molex	NIT	1/0	514DA-0 NIT	5510-2
19193-0556	Molex	NIT	1/0	514DA-0 NIT	5510-2
321866	Amp-Tyco	NIT	0	514DA-0 NIT	5510-2
321867	Amp-Tyco	NIT	0	514DA-0 NIT	5510-2
36917	Amp-Tyco	NIT	1/0	514DA-0 NIT	5510-2
36918	Amp-Tyco	NIT	1/0	514DA-0 NIT	5510-2

MANUFACTUER REFERENCE

MANF P/N	MANUFACTURER	P/S/T	SIZE	DIE P/N	LOC P/N
J974	T & B	NIT	0	514DA-0 NIT	5510-3
MS20659-117	MS	NIT	0	514DA-0 NIT	5510-2
YAV25-L1_	Burndy	NIT	1/0	514DA-0 NIT	5510-1
LCA1/0-56-X	PANDUIT	NIT	1/0	514DA-0 NIT-B	10029
YAV25L-2TC14-FX	BURNDY	NIT	# 0	514DA-0 NIT-B	5510-1
YAV25L-2TC38-FX	BURNDY	NIT	# 0	514DA-0 NIT-B	5510-1
1/10/0125	Raymond	1/0 flag	1/0	514DA-0 NIT-F	
322215	Amp-Tyco	1/0 flag	1/0	514DA-0 NIT-F	
MS25036-132	MS	IT	0	514DA-0IT	5510-2
MS25036-133	MS	IT	0	514DA-0IT	5510-2
MS25036-134	MS	NIT	0	514DA-0IT	5510-2
19067-0106	Molex	IT	1/0	514DA-0ITW	10080
H-982-34	Molex	IT	1/0	514DA-0ITW	10080
030-1734-000	CANNON	PIN	0	514DA-0N	5482
030-3200-003	Cannon	PIN /29-216	0	514DA-0N	5440
031-0502-000	CANNON	SKT	0	514DA-0N	9783
031-8011-747	CANNON	SKT	0	514DA-0N	5440
031-8521-000	CANNON	SKT	O	514DA-0N	10686
031-8521-005	CANNON	SKT	O	514DA-0N	10686
031-8521-015	CANNON	SKT	O	514DA-0N	10686
031-8521-020	CANNON	SKT	O	514DA-0N	10686
031-8521-025	CANNON	SKT	O	514DA-0N	10686
031-8521-030	CANNON	SKT	O	514DA-0N	10686
031-8521-035	CANNON	SKT	O	514DA-0N	10686
031-8561-000	CANNON	SKT	0 (50MM)	514DA-0N	10686
031-8655-000	Cannon	SKT	50mm (1/0)	514DA-0N	10702
10-497100-3	Amphenol-Bendix	PIN	0	514DA-0N	5440-1
10-581806	Amphenol-Bendix	PIN	0	514DA-0N	5442/ 10711SPG
10-581806-000	Amphenol-Bendix	PIN	0	514DA-0N	10711 SPG
10-639060	Amphenol-Bendix	SKT	2/0-10.3mm	514DA-0N	10691
10-639061	Amphenol-Bendix	SKT	2/0-10.3mm	514DA-0N	10691
10/1/40563	Amphenol-Bendix	SKT	0	514DA-0N	5441
1011X-125-013 P)	G & H TECHNOLOGY	PIN	0	514DA-0N	5440-5
1011X-910-001 S)	G & H TECHNOLOGY	Socket	0	514DA-0N	5440-5
1303G12 (P23)	ANDERSON	DIE	3/0	514DA-0N	
131-0502-000	CANNON	SKT	0	514DA-0N	5443
2-8461P-P2	Anderson	SKT	1/0	514DA-0N	10690
27917	VEAM	PIN	0	514DA-0N	5442
27937	VEAM	SKT	0	514DA-0N	5441
321866	Amp	NIT	1/0	514DA-0N	5510-14
330-0191-000	CANNON	PIN	0	514DA-0N	9783

MANUFACTUER REFERENCE

MANF P/N	MANUFACTURER	P/S/T	SIZE	DIE P/N	LOC P/N
330-0197-000	CANNON	PIN	0	514DA-0N	9783
330-8710-000	Cannon	PIN	50mm (1/0)	514DA-0N	10702
4276CT-4	Veam	PIN	2-0	514DA-0N	10653
47107-115	Veam	PIN	4/0 w 1/0 wire	514DA-0N	5498-1
5005-83-0000	Aero Electric	SKT	1/0	514DA-0N	5440
5034-125-00CL	Aero	SKT	0	514DA-0N	5440-9
511-320-0101	J-TECH	PIN	0	514DA-0N	5440
512-320-0101	J-TECH	SKT	0	514DA-0N	5440
5205-54-0000	Aero Electric	PIN	1/0	514DA-0N	5440
5234-127-00CL	Aero	PIN	0	514DA-0N	5440-9
BACC45DR4	BOEING	SKT	#0	514DA-0N	5440
CBO-4P	Cell-Tron	PIN	0	514DA-0N	
CV-R #0	Cannon	PIN	0	514DA-0N	5440
M39029/29-216	Mil Spec	PIN	1/0	514DA-0N	5440
M39029/30-222	MIL SPEC	SKT	0	514DA-0N	5440
M39029/44-293	MIL SPEC	PIN	0	514DA-0N	5440
M39029/45-300	Mil Spec	SKT	#0	514DA-0N	5440
M39029/48-323	MIL SPEC	PIN	#0	514DA-0N	5440-1
M39029/48-324	MIL SPEC	PIN	#0	514DA-0N	5440-1
M39029/49-333	Mil Spec	SKT	#0	514DA-0N	5440-1
MS90454-0-0	Mil Spec	SKT	#0	514DA-0N	5440
031-8012-747	CANNON	SKT	0	514DA-0N-275	5440-0
BACT12M2-4	Boeing	SKT	0	514DA-0N-275	5440-0
36916	Amp-Tyco	NIT	1/0	514DA-0NIT	5510-2
8-36917-3	Amp-Tyco	NIT	1/0	514DA-0NIT	5510-2
8-36917-5	Amp-Tyco	NIT	1/0	514DA-0NIT	5510-2
MS20659-117	MS	NIT	0	514DA-0NIT	5510-2
MS20659-118	MS	NIT	0	514DA-0NIT	5510-2
192210422	Molex	NIT	1/0	514DA-0NIT-B	10123
J972	T & B	NIT	0	514DA-0NIT-B	5510-3
J975	T & B	NIT	0	514DA-0NIT-B	5510-3
139368	FTS	NIT-no seam	0	514DA-0NNIT	5510-17
54108UF	Thomas & Betts	NIT 45°	1	514DA-1 NIT-B	TBD
G975	T & B	NIT	1	514DA-1 NIT-B	5505-1
M10 33		NIT	1	514DA-1 NIT-B	5510-12
1303G7 (P14)	Anderson	DIE	70MM	514DA-1/0 NIT-B	
H973	T & B	NIT	1/0	514DA-1/0 NIT-B	5510-3
DC65-0S	Boeing		0	514DA-1/0-D	5440-0
50618-4/0-115-ORT9-G	Veam	PIN	1/0	514DA-1/0-V-HEX	
47114-115	VEAM	SKT	4/0-1/0	514DA-1/0N	5498-2
MS90453-0-0	MILITARY STANDARD		1/0	514DA-1/0N	5440
MS90454-0-0	MILITARY STANDARD		1/0	514DA-1/0N	5440

MANUFACTUER REFERENCE

MANF P/N	MANUFACTURER	P/S/T	SIZE	DIE P/N	LOC P/N
MS90559-6	MILITARY STANDARD	PIN	1/0N	514DA-1/0N	5440-1
MS90559-6	MILITARY STANDARD	PIN	1/0	514DA-1/0N	5440-1
MS90560-3	MILITARY STANDARD	SKT	1/0	514DA-1/0N	5440-1
80-1010	Anderson	PIN	10MM	514DA-10 MNIT	10670-1
80-1110	Anderson	SKT	10MM	514DA-10 MNIT	10670-1
F10711U	T & B	NIT-R/A	4	514DA-10010	10010
G971U	T & B	NIT-R/A	#2	514DA-10011	10011
D10711U	T & B	NIT-R/A	#6	514DA-10012	10012
E10711U	T & B	NIT-R/A	8	514DA-10013	10013
1604038-1	Amp-Tyco	P/T	1/0	514DA-10023	10034-1
1604055	Amp-Tyco	PT	1/0	514DA-10023	10023-1
1604054	Amp-Tyco	PT	2/0	514DA-10024	10023-1
1604053	Amp-Tyco	PT	3/0	514DA-10025	10023-2
1604052	Amp-Tyco	PT	4/0	514DA-10026	10023-2
1604051	Amp-Tyco	PT	300MCM	514DA-10027	10023-2
1604039-1	Amp-Tyco	P/T	2	514DA-10034	10034-1
1604040-1	Amp-Tyco	P/T	4	514DA-10034	10034-1
1604041-1	Amp-Tyco	P/T	1	514DA-10034	10034-1
904-00 01-413	Spacecraft	NIT	6	514DA-10064	10064-1
904-00 02-413	Spacecraft	NIT	6	514DA-10064	10064-1
904-00 03-413	Spacecraft	NIT	6	514DA-10064	10064-1
904-00 04-413	Spacecraft	NIT	6	514DA-10064	10064-1
904-00 05-413	Spacecraft	NIT	6	514DA-10064	10064-1
904-00 06-413	Spacecraft	NIT	6	514DA-10064	10064-1
904-00 07-413	Spacecraft	NIT	6	514DA-10064	10064-1
904-00 08-413	Spacecraft	NIT	6	514DA-10064	10064-1
N700025	Ferrules Direct	Ferr	2/0	514DA-10066	10066-1
N500025	Ferrules Direct	Ferr	1/0	514DA-10067	10066-1
S2/0-38RX	Panduit	NIT	1/0-2/0	514DA-10067	10067
S3/0-38R-5	Panduit	NIT	2/0-3/0	514DA-10068	10068
#2 Flag	Kalas	#2 FLAG		514DA-10069-F	10069-spg
114149P34	Anderson	DIE	0.35	514DA-10071	
Anderson				514DA-10071	
114149P37	Anderson	DIE	0.4	514DA-10072	
Anderson				514DA-10072	
D6009-1048	Dynacraft	NIT	2/0	514DA-10078	10048-2
D6009-1048	Dynacraft	NIT	2/0	514DA-10078	
D6009-1052	Dynacraft	NIT	2/0	514DA-10078	10048-2
D6009-1052	Dynacraft	NIT	2/0	514DA-10078	
D6009-1059	Dynacraft	NIT	2/0	514DA-10078	10048-2
D6009-1059	Dynacraft	NIT	2/0	514DA-10078	10048-2
D6009-1059	Dynacraft	NIT	2/0	514DA-10078	

MANUFACTUER REFERENCE

MANF P/N	MANUFACTURER	P/S/T	SIZE	DIE P/N	LOC P/N
D6009-1066	Dynacraft	NIT	2/0	514DA-10078	
D6009-1072	Dynacraft	NIT	2/0	514DA-10078	10048-2
D6009-1072	Dynacraft	NIT	2/0	514DA-10078	
D6009-1078	Dynacraft	NIT	2/0	514DA-10078	
D6009-1156	Dynacraft	NIT	2/0	514DA-10078	
D6009-1082	Dynacraft	NIT	4/0	514DA-10079	10047-2
D6009-1082	Dynacraft	NIT	4/0	514DA-10079	
D6009-1085	Dynacraft	NIT	4/0	514DA-10079	10047-2
D6009-1085	Dynacraft	NIT	4/0	514DA-10079	
D6009-1091	Dynacraft	NIT	4/0	514DA-10079	
D6009-1098	Dynacraft	NIT	4/0	514DA-10079	10047-2
D6009-1098	Dynacraft	NIT	4/0	514DA-10079	
D6009-1104	Dynacraft	NIT	4/0	514DA-10079	
D6009-1195	Dynacraft	NIT	4/0	514DA-10079	10047-2
D6009-1195	Dynacraft	NIT	4/0	514DA-10079	
2/0-1.25	Julian	Flag		514DA-10120Flag	10120
4/0 Flag-Julian	Julian Electric	flag	4/0	514DA-10122-F-A	10122
10-606015-321	Amphenol-Bendix	SKT	10/12/2008	514DA-10605	10605-1
0270-0005	CABLECO	swivel nut	2	514DA-10606-2	10606
0270-0004	CABLECO	swivel nut	4	514DA-10606-4	10606
0270-0003	CABLECO	swivel nut	6	514DA-10606-6	10606
0270-0002	CABLECO	swivel nut	8	514DA-10606-8	10606
0270-0006	CABLECO	swivel nut	0	514DA-10609	10609
0270-0007	CABLECO	swivel nut	2/0	514DA-10609	10609
CT200A-2/0-101	Cableco	Term	2/0	514DA-10609	10750-9SPG
CT200A1/0-101	Cableco	Term	1/0	514DA-10609	10750-8SPG
0270-0008	Cableco	swivel nut	4/0	514DA-10611	10609
SY904-1	SMH	PIN	10/12/2008	514DA-10612	10612-1
SY903-1	SMH	PIN	#6	514DA-10612-2	10612-1
SY905-1	SMH	PIN	#8	514DA-10612-2	10612-1
SY56-0557	SMH	PIN	#6	514DA-10613	10613-1
1303G2 (P3)	Anderson	DIE	35MM	514DA-10614	
SY1319-6	SMH	PIN	#6	514DA-10614	10614-1
SY1319-2	SMH	PIN	#2	514DA-10615	10615-1
SY56-0559	SMH	PIN	#1	514DA-10616	10616-1
SY56-560	SMH	PIN	#1/0	514DA-10616	10616-1
SY917-1	SMH	PIN	#1/0	514DA-10616	10617-1

MANUFACTUER REFERENCE

MANF P/N	MANUFACTURER	P/S/T	SIZE	DIE P/N	LOC P/N
SY56-0571	SMH	PIN	#2/0	514DA-10617	10617-1
SY907	SMH	PIN	#2/0	514DA-10617	10617-1
SY908-1	SMH	PIN	#4/0	514DA-10617-2	10617-1
6406	Quick Cable	NIT	6	514DA-10620	10620-1
6404	Quick Cable	NIT	4	514DA-10621	10621-1
6402	Quick Cable	NIT	2	514DA-10622	10622-1
6410D	Quick Cable	NIT	1/0	514DA-10623	10623-1
6420F	Quick Cable	NIT	2/0	514DA-10623	10623-1
6430F	Quick Cable	NIT	3/0	514DA-10624	10624-1
RPC4040-L	Pyle Nat'l-Amphenol	PIN	4/0	514DA-10642	10642-1
RPC4840-L	Pyle Nat'l-Amphenol	PIN	4/0	514DA-10642	10642-1
1332	Anderson	Term	16-20	514DA-10644	10643-1
SM-184	TECKPAK	CLAMP	0.41	514DA-10650	10650
701-0186-02107	ELCON		2 #6 AWG	514DA-10658	10658-1
1766190-1	ELCON	SKT	#6	514DA-10659	10658-1
599-547	ELCON	SKT	#6	514DA-10659	10658-1
701-0187-02107	ELCON	SKT	#6	514DA-10659	10658-1
701-0188-02107	ELCON	PIN	#6	514DA-10659	10659-1
1SL 4/0PC G10	SPACECRAFT	PIN	4/0	514DA-10678	10678-1
1SL 4/0SC G10	SPACECRAFT	SKT	4/0	514DA-10678	10678-2
1SL 12PC AWG14 G10	SPACECRAFT	PIN	12/14/2008	514DA-10679	10679-1
1SL 12SC AWG14 G10	SPACECRAFT	SKT	12/14/2008	514DA-10679	10679-2
27914-20	Veam	PIN	12/16/2018	514DA-10N	
27915-26	Veam	PIN	8 w12-14	514DA-10N	5404
27935-26	Veam	SKT	8 w 12-14 wire	514DA-10N	5404
27964-20	Veam	SKT	#12 w 14-18 wire	514DA-10N	
27964-30	Veam	SKT	#12 w 8-10 wire	514DA-10N	10717SPG
27964-38	Veam	SKT	#12 w 8-10 wire	514DA-10N	
53452	Erni	SKT	10	514DA-10N	10735
594178	Erni	SKT	18-20	514DA-10N	10735
594180	Erni	SKT	12/14/2008	514DA-10N	10735
R10-6802-110	spacecraft	PIN	10	514DA-10N	10693
R10-6802-140	spacecraft	PIN	10	514DA-10N	10693
R10-6802-142	spacecraft	PIN	10	514DA-10N	10693
R10-6802-143	spacecraft	PIN	10	514DA-10N	10693
594182	Erni	SKT	8	514DA-10N.110	10735
5265-244-080H	Comsys	Pin	8/10/2008	514DA-10N100	5400
5265-244-080H	Aero Electric	PIN	8/10/2008	514DA-10N100	5400
5265-244-081H	Comsys	Pin	8/10/2008	514DA-10N100	5400

MANUFACTUER REFERENCE

MANF P/N	MANUFACTURER	P/S/T	SIZE	DIE P/N	LOC P/N
5265-244-081H	Aero Electric	PIN	8/10/2008	514DA-10N100	5400
CT500A-10-101	Cableco	Term	10	514DA-10N100	10750-1SPG
857-006-1212	Glenair	SKT	10	514DA-10N110	
C33	T & B	NIT	12/10/2008	514DA-12-10 NIT	
BCC-2.50-AG	Shaltbau	SKT	12/18/2008	514DA-12-18N	10740
LV320 BCC-2.50-AG	Shaltbau	SKT	12/18/2008	514DA-12-18N	10741
030-9185-003	CANNON	PIN	12	514DA-12N	10661
031-9186-003	CANNON	SKT	12	514DA-12N	10661
10-611100-128	Amphenol-Bendix	PIN	12	514DA-12N	
10-611101-128	Amphenol-Bendix	SKT	12	514DA-12N	
27913	VEAM	PIN	16	514DA-12N	10716
27964	Veam	SKT	12	514DA-12N	
511-220-1212	J-TECH	PIN	12	514DA-12N	10661
512-220-1212	J-TECH	SKT	12	514DA-12N	10661
714-07-04204	Elcon	SKT	12	514DA-12N	10661
714-07-04206	Elcon	SKT	12	514DA-12N	10661
714-07-04207	Elcon	SKT	12	514DA-12N	10661
714-07-04209	Elcon	SKT	12	514DA-12N	10661
M39029/4-113	MIL SPEC	PIN	12	514DA-12N	10661
M39029/5-118	Mil Spec	SKT	12	514DA-12N	10661
160-1016	Anderson	PIN	16MM	514DA-16 MNIT	10670-2
160-1116	Anderson	SKT	16MM	514DA-16 MNIT	10671-1
80-1016	Anderson	PIN	16MM	514DA-16 MNIT	10670-1
B71	T & B	NIT	18-14	514DA-16-14 NIT	
80-1116	Anderson	SKT	16MM	514DA-16MNIT	10670-1
030-9205-007	CANNON	PIN	16	514DA-16n	10660
031-1123-000	Cannon	SKT	16	514DA-16N	
031-9206-006	CANNON	SKT	16	514DA-16N	10660
10-611100-178	Amphenol-Bendix	PIN	16	514DA-16N	
10-611101-178	Amphenol-Bendix	SKT	16	514DA-16N	
10-642685-00B PA4	Amphenol-Bendix	SKT	8/16/2008	514DA-16N	10739
511-110-1616	J-TECH	PIN	16	514DA-16N	10660
511-220-1216	J-TECH	PIN	12/16/2008	514DA-16N	10661
512-110-1616	J-TECH	SKT	16	514DA-16N	10660
512-220-1216	J-TECH	SKT	12/16/2008	514DA-16N	10661
702-0101-04204	Elcon	SKT	16	514DA-16N	10660
702-0101-04206	Elcon	SKT	16	514DA-16N	10660
702-0101-04207	Elcon	SKT	16	514DA-16N	10660
702-0101-04209	Elcon	SKT	16	514DA-16N	10660
702-0102-04204	Elcon	SKT	16	514DA-16N	10660
702-0102-04206	Elcon	SKT	16	514DA-16N	10660
702-0102-04207	Elcon	SKT	16	514DA-16N	10660

MANUFACTUER REFERENCE

MANF P/N	MANUFACTURER	P/S/T	SIZE	DIE P/N	LOC P/N
702-0102-04209	Elcon	SKT	16	514DA-16N	10660
714-08-04204	Elcon	SKT	16	514DA-16N	10660
714-08-042047	Elcon	SKT	16	514DA-16N	10660
714-08-042049	Elcon	SKT	16	514DA-16N	10660
714-08-04206	Elcon	SKT	16	514DA-16N	10660
714-08-04206	Elcon	SKT	16	514DA-16N	10660
714-08-04207	Elcon	SKT	16	514DA-16N	10660
714-08-04209	Elcon	SKT	16	514DA-16N	10660
M39029/4-111	MIL SPEC	PIN	16	514DA-16n	10660
M39029/4-114	MIL SPEC	PIN	12/16/2008	514DA-16N	
M39029/5-116	Mil Spec	SKT	16	514DA-16N	10660
M39029/5-119	Mil Spec	SKT	12/16/2008	514DA-16N	10661
10-647320-001	amphenol-Bendix	PIN	16	514DA-16N-T	10728
10-647320-004	amphenol-Bendix	PIN	16	514DA-16N-T	10728
10-647320-005	amphenol-Bendix	PIN	16	514DA-16N-T	10728
10-647320-00B	amphenol-Bendix	PIN	16	514DA-16N-T	10728
10-647322-001	amphenol-Bendix	Post	16	514DA-16N-T	10729
10-647322-004	amphenol-Bendix	Post	16	514DA-16N-T	10729
10-647322-005	amphenol-Bendix	Post	16	514DA-16N-T	10729
10-647322-00B	amphenol-Bendix	Post	16	514DA-16N-T	10729
27964-12	Veam	SKT	20-24	514DA-16N048	
193842-1	Amp-Tyco	SKT	#12-14	514DA-18N	
YAEV1C-L	BURNDY	IT	# 1	514DA-1IT-B	5510-1
030-8592-000	CANNON	PIN	50mm-/0	514DA-1N	10705-1
030-8592-006	CANNON	PIN	50mm-/0	514DA-1N	10705-1
030-8614-000	CANNON	PIN	0	514DA-1N	10705-1
030-8614-006	CANNON	PIN	0	514DA-1N	10705-1
030-8614-010	CANNON	PIN	4/0 barrel	514DA-1N	10705-1
030-8614-016	CANNON	PIN	4/w0barrel	514DA-1N	10705-1
030-8614-020	CANNON	PIN	2/w0barrel	514DA-1N	10705-1
030-8614-026	CANNON	PIN	2/w0barrel	514DA-1N	10705-1
030-8614-030	CANNON	PIN	16mm-/0	514DA-1N	10705-1
030-8614-036	CANNON	PIN	16mm-/0	514DA-1N	10705-1
1303G8 (P16)	Anderson	DIE	50MM	514DA-1N	
05A198-22	T & B	90 DE-GREE NIT	#1	514DA-1NIT-B-90	5730
1011X-124-011 P)	G & HTECHNOLOGY	PIN	2	514DA-2 HEX	5430-5
19071-0281	Molex	IT		514DA-2 IT	5505-7
52044-1	Amp-Tyco	IT	#2	514DA-2 IT	5505
52044-2	Amp-Tyco	IT	#2	514DA-2 IT	5505
52044-4	Amp-Tyco	IT	#2	514DA-2 IT	5505
52044-5	Amp-Tyco	IT	#2	514DA-2 IT	5505
PV2-14RX	PANDUIT	IT	2	514DA-2 IT	5505

MANUFACTUER REFERENCE

MANF P/N	MANUFACTURER	P/S/T	SIZE	DIE P/N	LOC P/N
PV2-56RX	PANDUIT	IT	2	514DA-2 IT	5505
320138	Amp-Tyco	NIT	2	514DA-2 NIT	5505
320383	Amp-Tyco	NIT	2	514DA-2 NIT	5505
35184	Amp-Tyco	NIT	2	514DA-2 NIT	5505
ETC #2	ETC	NIT	2	514DA-2 NIT	10121
G-375-14	MOLEX	NIT	2	514DA-2 NIT	5510-2
G971	T & B	NIT	2	514DA-2 NIT	5505-3
LCAN2-10-Q	Panduit	NIT	2	514DA-2 NIT	5540-3
P2-38R	Panduit	NIT	2	514DA-2 NIT	10065
19193-0303	Molex	NIT	2	514DA-2 NIT-B	
19193-0305	Molex	NIT	2	514DA-2 NIT-B	
19193-0307	Molex	NIT	2	514DA-2 NIT-B	
19193-0309	Molex	NIT	2	514DA-2 NIT-B	
330301	Amp-Tyco	NIT	2	514DA-2 NIT-B	5505-8
4-740-38	Terminal & Cable	NIT	1/2/8	514DA-2 NIT-B	10032
54107	Thomas & Betts	NIT	2	514DA-2 NIT-B	5505-1
606290-1	Amp-Tyco	TERM	2	514DA-2 NIT-B	5505
606290-2	Amp-Tyco	TERM	2	514DA-2 NIT-B	5505
606290-3	Amp-Tyco	TERM	2	514DA-2 NIT-B	5505
606290-4	Amp-Tyco	TERM	2	514DA-2 NIT-B	5505
606290-5	Amp-Tyco	TERM	2	514DA-2 NIT-B	5505
8801-050F	Quick Cable	NIT	1/2/2008	514DA-2 NIT-B	10032
8801D	Quick Cable	NIT	1/2/2008	514DA-2 NIT-B	10032
8801E	Quick Cable	NIT	1/2/2008	514DA-2 NIT-B	10032
8801F	Quick Cable	NIT	1/2/2008	514DA-2 NIT-B	10032
8801H	Quick Cable	NIT	1/2/2008	514DA-2 NIT-B	10032
M10 33		NIT	2	514DA-2 NIT-B	5510-12
M1033	Burndy	NIT	2	514DA-2 NIT-B	5510-12
"M1033"	Burndy	NIT	2	514DA-2 NIT-B	5510-12
1/10/0121	Raymond	Flag	2	514DA-2 NIT-F	
1011X-P-902-001 S)	G & HTECHNOLOGY	Socket	2	514DA-2-HEX	5430-5
AE90-0202-9021	Air Electro	SKT	2/0	514DA-2/0 300	5401-2
324083	Amp-Tyco	IT	2/0	514DA-2/0 IT	5520-2
324084	Amp-Tyco	IT	2/0	514DA-2/0 IT	5520-2
36922	Amp-Tyco	NIT	2/0	514DA-2/0 NIT	5520-2
36923	Amp-Tyco	NIT	2/0	514DA-2/0 NIT	5520-2
K971	T & B	NIT	2/0	514DA-2/0 NIT	5520-3
19067-0112	Molex	NIT	2/0	514DA-2/0 NIT-B	5520-2
J973	T & B	NIT	2/0	514DA-2/0 NIT-B	5520-3
K973	Thomas & Betts	NIT	2/0	514DA-2/0 NIT-B	5520-3
LCAN3/0-14-X	Panduit	NIT	3/0	514DA-2/0 NIT-B	5540-4
LCAN3/0-38-X	Panduit	NIT	3/0	514DA-2/0 NIT-B	5540-4

MANUFACTUER REFERENCE

MANF P/N	MANUFACTURER	P/S/T	SIZE	DIE P/N	LOC P/N
M13 45		NIT	2/0	514DA-2/0 NIT-B	5510-11
"M1345"	Burndy	NIT	2/0	514DA-2/0 NIT-B	5510-11
030-2111-000	Cannon	PIN	2/0	514DA-2/0-D	5402
030-8224-200	cannon	PIN	2/0	514DA-2/0-D	5402
042-1013-204	FLIGHT CONNECTOR		2/0	514DA-2/0-D	5401
042-1015-204	FLIGHT CONNECTOR		2/0	514DA-2/0-D	5401
2/0 P & S Contact	FLIGHT CONNECTOR	2/0 P & S Contact		514DA-2/0-D	5401 & 5402
2/0 P & S Contact	TRI-STAR	P/S	BAN 7027-1 S	514DA-2/0-D	5402
2/0 P & S Contact	TRI-STAR	P/S		514DA-2/0-D	5401
2/0 P & S Contact	TRI-STAR	P/S	BAN 7027-501 P)	514DA-2/0-D	5402
310-4020-066D	Tri-Star	SKT	2/0	514DA-2/0-D	5402
319-4020-066D	Tri-Star	PIN	2/0	514DA-2/0-D	5402
Ban7027-511	Douglas	SKT	2/0	514DA-2/0-D	5402
BAN7027-513	Douglas	PIN	2/0	514DA-2/0-D	5402
44519-2/0	Veam	DIE-HEX	2/0	514DA-2/0-V-HEX	
44519-2/0	Veam	DIE-HEX	2/0	514DA-2/0-V-HEX	
47109-135	Veam	SKT	2/0	514DA-2/0-V-HEX	
322090	Amp-Tyco	IT	2/0	514DA-2/0IT	5520-2
MS25036-135	MS	NIT	2/0	514DA-2/0IT	5520-2
MS25036-136	MS	NIT	2/0	514DA-2/0IT	5520-2
MS25036-137	MS	NIT	2/0	514DA-2/0IT	5520-2
19063-0135	Molex	IT	2/0	514DA-2/0ITW	10080
J-787-34	Molex	IT	2/0	514DA-2/0ITW	10080
10-597276-48	Amphenol-Bendix	PIN	2/0	514DA-2/0N	6490-1
10-597276-48B	Amphenol-Bendix	PIN	2/0	514DA-2/0N	6490-1
10-597277-48	Amphenol-Bendix	SKT	2/0	514DA-2/0N	6490
10-597277-48B	Amphenol-Bendix	SKT	2/0	514DA-2/0N	6490
310-4020-066D	Tri-star		2/0	514DA-2/0N	5440
47107-135T9	VEAM	PIN	4/0-2/0	514DA-2/0N	5498-1
CIR290 AWG 2/0	VEAM	PIN	2/0	514DA-2/0N	5498-1
M39029/48-325	MIL SPEC	PIN	2/0	514DA-2/0N	5450
M39029/48-326	MIL SPEC	PIN	2/0	514DA-2/0N	5450
M39029/49-334	Mil Spec	SKT	2/0	514DA-2/0N	5450
MS90559-3	MILITARY STANDARD	PIN	2/0	514DA-2/0N	5450
MS90559-4	MILITARY STANDARD	PIN	2/0N	514DA-2/0N	5450
MS90560-2	MILITARY STANDARD	SKT	2/0	514DA-2/0N	5450
8950-6022	Souriau	SKT	4/0-2/0	514DA-2/0N or 2/0-D	5470
321869	Amp-Tyco	NIT	2/0	514DA-2/0NIT	5520-2
MS20659-119	MS	NIT	2/0	514DA-2/0NIT	5520-2
MS20659-153	MS	NIT	2/0	514DA-2/0NIT	5520-2

MANUFACTUER REFERENCE

MANF P/N	MANUFACTURER	P/S/T	SIZE	DIE P/N	LOC P/N
MS20659-120	MS	NIT	2/0	514DA-2/ONIT	5520-2
MS20659-136	MS	NIT	2/0	514DA-2/ONIT	5520-2
MS20659-154	MS	NIT	2/0	514DA-2/ONIT	5520-2
030-9173-006	CANNON	PIN	20	514DA-20N	10662
031-8704-508	Cannon	SKT	20	514DA-20N	10662
031-8704-509	Cannon	SKT	20	514DA-20N	10662
031-9174-004	CANNON	SKT	20	514DA-20N	10662
0460-202-20141	DEUTSCH	PIN	20	514DA-20N	10747
0462-201-20141	DEUTSCH	SKT	20	514DA-20N	10747
430-8560-404	Cannon	PIN	20	514DA-20N	10662
430-8560-409	Cannon	PIN	20	514DA-20N	10662
430-8560-411	Cannon	PIN	20	514DA-20N	10662
430-8560-412	Cannon	PIN	20	514DA-20N	10662
708-0104-04206	Elcon	SKT	20	514DA-20N	10662
708-0104-04209	Elcon	SKT	20	514DA-20N	10662
M39029/4-110	MIL SPEC	PIN	20	514DA-20N	10662
M39029/4-112	MIL SPEC	PIN	16-20	514DA-20N	10660
M39029/5-115	Mil Spec	SKT	20	514DA-20N	10662
M39029/5-117	Mil Spec	SKT	16-20	514DA-20N	10660
511-110-1622	J-Tech	PIN	16-22	514DA-22N	10660
512-110-1622	J-Tech	SKT	16-22	514DA-22N	10660
160-1025	Anderson	PIN	25MM	514DA-25 MNIT	10670-2
160-1125	Anderson	SKT	25MM	514DA-25 MNIT	10671-1
80-1025	Anderson	PIN	25MM	514DA-25 MNIT	10670-1
80-1125	Anderson	SKT	25MM	514DA-25 MNIT	10670-1
324053	Amp-Tyco	TERM	#2	514DA-2IT	5505
MS25036-126	MS	IT	2	514DA-2IT	5505
MS25036-127	MS	IT	2	514DA-2IT	5505
MS25036-128	MS	IT	2	514DA-2IT	5505
031-1005-000	CANNON	SKT	"0" Contact w/#2 wire well	514DA-2N	5430-2
10-838109-021	Amphenol-Bendix	PIN	2	514DA-2N	10734
10-838109-022	Amphenol-Bendix	PIN	2	514DA-2N	10734
10-838109-023	Amphenol-Bendix	PIN	2	514DA-2N	10734
10-838109-024	Amphenol-Bendix	PIN	2	514DA-2N	10734
10-838109-025	Amphenol-Bendix	PIN	2	514DA-2N	10734
1011X-125-001 P)	G & H TECHNOLOGY	PIN	2)	514DA-2N	54304
1011X-P-902-001 S)	G & H TECHNOLOGY	Socket	2	514DA-2N	5430-4
CT200A-2-101	Cableco	Term	2	514DA-2N	10750-7SPG
CT500A-2-101	Cableco	Term	2	514DA-2N	10750-5SPG
MS90559-7	MILITARY STANDARD		2N	514DA-2N	5430
MS90560-4	MILITARY STANDARD		2	514DA-2N	5430

MANUFACTUER REFERENCE

MANF P/N	MANUFACTURER	P/S/T	SIZE	DIE P/N	LOC P/N
060-0085-021	Amphenol	Radsok	2	514DA-2N 270	8901 SPG
060-0085-022	Amphenol	Radsok	2	514DA-2N 270	8901 SPG
060-0085-0227	Amphenol	Radsok	2	514DA-2N 270	8901 SPG
060-0085-023	Amphenol	Radsok	2	514DA-2N 270	8901 SPG
060-0085-024	Amphenol	Radsok	2	514DA-2N 270	8901 SPG
060-0085-025	Amphenol	Radsok	2	514DA-2N 270	8901 SPG
060-0085-026	Amphenol	Radsok	2	514DA-2N 270	8901 SPG
060-0085-02B	Amphenol	Radsok	2	514DA-2N 270	8901 SPG
917BK	Anderson	NIT	1/0	514DA-2N-1	5640 SPG
#2 NIT	Julian	NIT	2	514DA-2N-NIT	10070SPG
#2 NIT	Julian	NIT	2	514DA-2N-NIT	10070SPG
YPN060-002H	Hypertronics	PIN	2	514DA-2N.240	10737
YSK060-009AH	Hypertronics	SKT	2	514DA-2N.240	10737
030-8225-100	CANNON	PIN	0-2	514DA-2n.264	5440
030-9225-100	Cannon	PIN	0-2	514DA-2N264	5440
10-838078-021	Amphenol-Bendix	SKT	2	514DA-2N356	
10-838078-021	Amphenol-Bendix	SKT	2	514DA-2N356	10664
10-838078-022	Amphenol-Bendix	SKT	2	514DA-2N356	10664
10-838078-023	Amphenol-Bendix	SKT	2	514DA-2N356	10664
10-838078-024	Amphenol-Bendix	SKT	2	514DA-2N356	10664
10-838078-025	Amphenol-Bendix	SKT	2	514DA-2N356	10664
2-322870-1	Amp-Tyco	NIT	#2 AWG	514DA-2NIT	5505
2-322870-2	Amp-Tyco	NIT	#2 AWG	514DA-2NIT	5505
322870	Amp-Tyco	NIT	#2 AWG	514DA-2NIT	5505
40018	Hollingsworth	DIE	2 NIT	514DA-2NIT	40018-1
8-322870-3	Amp-Tyco	NIT	#2 AWG	514DA-2NIT	5505
8-322870-5	Amp-Tyco	NIT	#2 AWG	514DA-2NIT	5505
MS20659-113	MS	NIT	2	514DA-2NIT	5505
MS20659-114	MS	NIT	2	514DA-2NIT	5505
MS20659-133	MS	NIT	2	514DA-2NIT	5505
MS20659-146	MS	NIT	2	514DA-2NIT	5505
MS20659-147	MS	NIT	2	514DA-2NIT	5505
MS20659-148	MS	NIT	2	514DA-2NIT	5505
YAV2CL-2TC38-FX	BURNDY	NIT	#2	514DA-2NIT-B	5505-1
YAV2CLNK	BURNDY	NIT	#2	514DA-2NIT-BD	5505-1
36929	Amp-Tyco	NIT	3/0	514DA-3/0 NIT	5530-2
55995-1	Amp-Tyco	NIT	3/0	514DA-3/0 NIT	5530-2
55995-2	Amp-Tyco	NIT	3/0	514DA-3/0 NIT	5530-2
8-36929-3	Amp-Tyco	NIT	3/0	514DA-3/0 NIT	5530-2
8-36929-5	Amp-Tyco	NIT	3/0	514DA-3/0 NIT	5530-2
YAV27-2L38-NK	BURNDY			514DA-3/0 NIT-B	5530-1
YAV27-LNK	BURNDY			514DA-3/0 NIT-B	5530-1

MANUFACTUER REFERENCE

MANF P/N	MANUFACTURER	P/S/T	SIZE	DIE P/N	LOC P/N
030-8224-300	Cannon	PIN	3/0	514DA-3/0-D	5402-6
030-8224-400	Cannon	PIN	4/0	514DA-3/0-D	5402-6
031-8018-300	Cannon	SKT-body for -600	3/0-4/0	514DA-3/0-D	5402-4
031-8018-300	Cannon	SKT	3/0	514DA-3/0-D	5402-4
031-8018-600	Cannon	SKT	3/0-4/0	514DA-3/0-D	5402-4
310-4030-066D	Tri-Star	SKT	3/0	514DA-3/0-D	5402-4
310-4030-066D	Tri-Star	SKT	3/0	514DA-3/0-D	5402-4
319-4030-066D	Tri-Star	PIN	3/0	514DA-3/0-D	5402-6
319-4040-066D	Tri-Star	PIN	4/0	514DA-3/0-D	5402-6
BAN7027-515	Douglas	SKT	3/0	514DA-3/0-D	5402-4
BAN7027-517	douglas	PIN	3/0	514DA-3/0-D	5402-6
BAN7027-521	Douglas	PIN	4/0	514DA-3/0-D	5402-6
LV320 S10/95	Shaltbau	SKT	3/0	514DA-3/0410	10742
322059	Amp-Tyco	IT	3/0	514DA-3/0IT	5530-2
MS25036-138	MS	NIT	3/0	514DA-3/0IT	5530-2
MS25036-139	MS	NIT	3/0	514DA-3/0IT	5530-2
CT200A-3/0-101	Cableco	Term	3/0	514DA-3/0N350	10750-10SPG-10SPG
MS20659-121	MS	NIT	3/0	514DA-3/0NIT	5530-2
MS20659-122	MS	NIT	3/0	514DA-3/0NIT	5530-2
MS20659-155	MS	NIT	3/0	514DA-3/0NIT	5530-2
MS20659-156	MS	NIT	3/0	514DA-3/0NIT	5530-2
MS20659-121)	MS	NIT	3/0	514DA-3/ONIT	5530-2
MS20659-122)	MS	NIT	3/0	514DA-3/ONIT	5530-2
MS20659-123	MS	NIT	3/0	514DA-3/ONIT	5530-2
MS20659-155)	MS	NIT	3/0	514DA-3/ONIT	5530-2
MS20659-156)	MS	NIT	3/0	514DA-3/ONIT	5530-2
47107-135	Veam	PIN	2/0 (4/0 frt)	514DA-3462	5487-1
80-1035	Anderson	PIN	35MM	514DA-35 MNIT	10670-1
80-1135	Anderson	SKT	35MM	514DA-35 MNIT	10670-1
160-1035	Anderson	PIN	35MM	514DA-35MNIT	10670-2
160-1135	Anderson	SKT	35MM	514DA-35MNIT	10671-1
27936	VEAM	SKT	4	514DA-4 HEX	5497
27936-62	VEAM	SKT	4	514DA-4 HEX	5497
46646-0	Veam	PIN	0	514DA-4 HEX	5442
47647-0	Veam	SKT	0 w #4 wire	514DA-4 HEX	5441
1/10/0064	Raymond	IT	4	514DA-4 IT	10004-1
19067-0077	Molex	IT	4	514DA-4 IT	10004-1
19067-0077	Molex	IT	4	514DA-4 IT	10004-1
19071-0237	Molex	IT	4	514DA-4 IT	10004-1
52043-3	Amp-Tyco	IT	4	514DA-4 IT	10004-1
PV4-14R-E	Panduit	IT	4	514DA-4 IT	10004-1

MANUFACTUER REFERENCE

MANF P/N	MANUFACTURER	P/S/T	SIZE	DIE P/N	LOC P/N
YAEV4C-RS	Burndy	IT-RA	4	514DA-4 IT-B-A	10082
1-33471-1	Amp-Tyco	T	4	514DA-4 NIT	5504
1-33471-2	Amp-Tyco	T	4	514DA-4 NIT	5504
2-31811-3	Amp-Tyco	NIT	4	514DA-4 NIT	5504
2-31811-5	Amp-Tyco	NIT	4	514DA-4 NIT	5504
2-33469-2	Amp-Tyco	NIT	4	514DA-4 NIT	5504
2-33471-3	Amp-Tyco	T	4	514DA-4 NIT	5504
31811	Amp-Tyco	NIT	4	514DA-4 NIT	5504
33468	Amp-Tyco	NIT	4	514DA-4 NIT	5504
33469	Amp-Tyco	NIT	4	514DA-4 NIT	5504
33471	Amp-Tyco	NIT	4	514DA-4 NIT	5504
8-33469-2	Amp-Tyco	NIT	4	514DA-4 NIT	5504
8-33469-5	Amp-Tyco	NIT	4	514DA-4 NIT	5504
8-33471-2	Amp-Tyco	T	4	514DA-4 NIT	5504
8-33471-5	Amp-Tyco	T	4	514DA-4 NIT	5504
F-366-14	MOLEX	NIT	4	514DA-4 NIT	5504
54138	Thomas & Betts	NIT	4	514DA-4 NIT-B	5504
606289-2	Amp-Tyco	NIT	4	514DA-4 NIT-B	10037
606289-2	Amp-Tyco	NIT	4	514DA-4 NIT-B	10037
F10731	T & B	NIT	4	514DA-4 NIT-B	5504
LCA4-38-L	Panduit	NIT	4	514DA-4 NIT-B	10031
LCA4-38L	PANDUIT	NIT	4	514DA-4 NIT-B	10031
321275	Amp-Tyco	flag	4	514DA-4 NIT-F	10036
321275	Amp-Tyco	flag	4	514DA-4 NIT-F	10036
YA28L	Panduit	NIT	4/0	514DA-4/0 NIT	5510-75510-10
YA28L	Burnda	NIT	4/0	514DA-4/0 NIT	5510-10
4-790-38	Terminal & Cable	NIT	4/0	514DA-4/0 NIT-B	10033
8840-050F	Quick Cable	NIT	4/0	514DA-4/0 NIT-B	10033
8840D	Quick Cable	NIT	4/0	514DA-4/0 NIT-B	10033
8840E	Quick Cable	NIT	4/0	514DA-4/0 NIT-B	10033
8840F	Quick Cable	NIT	4/0	514DA-4/0 NIT-B	10033
8840H	Quick Cable	NIT	4/0	514DA-4/0 NIT-B	10033
L973	T & B	NIT	4/0	514DA-4/0 NIT-B	5521-1
M973	T & B	NIT	4/0	514DA-4/0 NIT-B	5540-5
YA28L	Burndy	NIT	4/0	514DA-4/0 NIT-B	5510-10
1526083-2	Amp-Tyco	T	4/0	514DA-4/0 NIT470	5540-4
1526083-2	Amp-Tyco	T	4/0	514DA-4/0 NIT470	5540-4
1526088-3	Amp-Tyco	T	4/0	514DA-4/0 NIT470	5540-4
1526089-2	Amp-Tyco	T	4/0	514DA-4/0 NIT470	5540-4
1526094-3	Amp-Tyco	T	4/0	514DA-4/0 NIT470	5540-4
40389	AET	T	4/0	514DA-4/0 NIT470	5540-4
40389CC	AET	T	4/0	514DA-4/0 NIT470	5540-4

MANUFACTUER REFERENCE

MANF P/N	MANUFACTURER	P/S/T	SIZE	DIE P/N	LOC P/N
40509CC	AET	T	4/0	514DA-4/0 NIT470	5540-4
030-8151-000	Cannon	PIN	4/0	514DA-4/0-D	5402-6
031-1194-000	Cannon	SKT	4/0	514DA-4/0-D	5402
031-8018-400	Cannon	SKT	4/0	514DA-4/0-D	5402-4
031-8249-100	Cannon	SKT	4/0	514DA-4/0-D	5402-4
310-4040-066D	Tri-Star	SKT	4/0	514DA-4/0-D	5402-4
Ban 7027-1	Douglas	SKT	4/0	514DA-4/0-D	5402
Ban 7027-501 P	Cannon	PIN	4/0	514DA-4/0-D	5402
Ban 7027-507	Cannon	SKT	4/0	514DA-4/0-D	5402-4
Ban 7027-509	Cannon	PIN	4/0	514DA-4/0-D	5402-6
BAN7027-519	Douglas	SKT	4/0	514DA-4/0-D	5402-4
322061	Amp-Tyco	IT	4/0	514DA-4/0IT	5540-2
MS25036-140	MS	NIT	4/0	514DA-4/0IT	5540-2
MS25036-141	MS	NIT	4/0	514DA-4/0IT	5540-2
10-497101-43	Amphenol-Bendix	SKT	4/0	514DA-4/0N	5470
10-597276-47	Amphenol-Bendix	PIN	4/0	514DA-4/0N	6491-1
10-597276-47D	Amphenol-Bendix	PIN	4/0	514DA-4/0N	6491-1
10-597277-47	Amphenol-Bendix	SKT	4/0	514DA-4/0N	6491
10-597277-47B	Amphenol-Bendix	SKT	4/0	514DA-4/0N	6491
10-606015-47	Amphenol-Bendix	SKT	4/0	514DA-4/0N	10676
1303G3 (P4)	Anderson	DIE	95MM	514DA-4/0N	
2-8461P-P1	Anderson	SKT	4/0	514DA-4/0N	10689
320-1195	Anderson	SKT	95MM	514DA-4/0N	10671-3
47107-165	VEAM	PIN	4/0	514DA-4/0N	5487-1
47107-165FT	VEAM	PIN	4/0	514DA-4/0N	10051
47114-165	VEAM	SKT	4/0	514DA-4/0N	5487-2
47235-165 FTT9	VEAM	PIN	4/0	514DA-4/0N	10051
4830F	Quick Cable	NIT	3/0	514DA-4/0N	10066 spg
CIR290 AWG 4/0	VEAM	PIN	4/0	514DA-4/0N	5498-4
M39029/48-326	Mil Spec	PIN	2/0	514DA-4/0N	5450
M39029/48-327	MIL SPEC	PIN	4/0	514DA-4/0N	5470
M39029/48-328	MIL SPEC	PIN	4/0	514DA-4/0N	5470
M39029/48-49 modified	BAE Systems	skt	4/0	514DA-4/0N	10748SPG
M39029/49-335	Mil Spec	SKT	4/0	514DA-4/0N	5470
MS90559-1	MILITARY STANDARD	PIN	4/0	514DA-4/0N	5470
MS90559-2	MILITARY STANDARD	PIN	4/0	514DA-4/0N	5470
MS90560-1	MILITARY STANDARD	SKT	4/0	514DA-4/0N	5470
MS90560-1	Mil Spec	SKT	4/0	514DA-4/0N	5470
R10-9468-110	spacecraft	PIN	4/0	514DA-4/0N	10694
R10-9468-140	spacecraft	PIN	4/0	514DA-4/0N	10694
R10-9468-142	spacecraft	PIN	4/0	514DA-4/0N	10694
R10-9468-143	spacecraft	PIN	4/0	514DA-4/0N	10694

MANUFACTUER REFERENCE

MANF P/N	MANUFACTURER	P/S/T	SIZE	DIE P/N	LOC P/N
ZZM-4041-10L-A287	Pyle National	PIN	4/0	514DA-4/0N	10713-1 SPG
ZZM-4041-10LB-A287	Pyle National	PIN	4/0	514DA-4/0N	10713-SPG
ZZM-4041-10LKB-A287	Pyle National	PIN	4/0	514DA-4/0N	10713-SPG
CGE06	Cannon	SKT	95MM	514DA-4/0N-525	10696
CGE2	Cannon	PIN	95MM	514DA-4/0N-525	10696
50618-4/0-144FTT9	VEAM	PIN	4/0	514DA-4/0N.460	
50627-4/0-144T9	VEAM	SKT	4/0	514DA-4/0N.460	10601
50627-4/0-155T9	VEAM	SKT	4/0	514DA-4/0N.490	10601
MS20659-123	MS	NIT	4/0	514DA-4/0NIT	5540-2
MS20659-124	MS	NIT	4/0	514DA-4/0NIT	5540-2
MS20659-137	MS	NIT	4/0	514DA-4/0NIT	5540-2
MS20659-157	MS	NIT	4/0	514DA-4/0NIT	5540-2
MS20659-158	MS	NIT	4/0	514DA-4/0NIT	5540-2
MS20659-159	MS	NIT	4/0	514DA-4/0NIT	5540-2
MS20659-160	MS	NIT	4/0	514DA-4/0NIT	5540-2
YAV28-L	FCI	T	4/0	514DA-4/0NIT	5540-2
S4/0-12R	Panduit	NIT	4/0	514DA-4/0NIT-B	10128
S4/0-38R	Panduit	NIT	4/0	514DA-4/0NIT-B	10128
S4/0-56R	Panduit	NIT	4/0	514DA-4/0NIT-B	10128
S4/0-78R	Panduit	NIT	4/0	514DA-4/0NIT-B	10128
CT200A-4/0-101	Cableco	Term	4/0	514DA-4/0NMOD	10750-11 SPG
MS20659-124)	MS	NIT	4/0	514DA-4/ONIT	5540-2
MS20659-137)	MS	NIT	4/0	514DA-4/ONIT	5540-2
AE90-0202-9021	Air Electro	SKT	2/0	514DA-480 HEX	5401-2
G-328633-1	Raytheon	PIN	2/0	514DA-480 HEX	5401-1
G-328633-1	Raytheon	SKT	2/0	514DA-480 HEX	5401-2
G328633-3	Raytheon		O	514DA-480HEX	5401-1
G328633-4	Raytheon		O	514DA-480HEX	5401-1
27916	VEAM	PIN	4/6/8	514DA-4HEX	5497
MS25036-123	MS	IT	4	514DA-4IT	5504
MS25036-124	MS	IT	4	514DA-4IT	5504
030-1213-000	CANNON	PIN	4	514DA-4N	5420-3
030-1881-001	CANNON	PIN	4	514DA-4N	
031-0560-041	CANNON	SKT	4	514DA-4N	5422
031-1043-001	CANNON	SKT	4	514DA-4N	
031-3117-001	CANNON	SKT	4	514DA-4N	5420
060-0085-041	Amphenol	Radsok	4	514DA-4N	8901 SPG
060-0085-042	Amphenol	Radsok	4	514DA-4N	8901 SPG
060-0085-0427	Amphenol	Radsok	4	514DA-4N	8901 SPG
060-0085-043	Amphenol	Radsok	4	514DA-4N	8901 SPG
060-0085-044	Amphenol	Radsok	4	514DA-4N	8901 SPG
060-0085-045	Amphenol	Radsok	4	514DA-4N	8901 SPG

MANUFACTUER REFERENCE

MANF P/N	MANUFACTURER	P/S/T	SIZE	DIE P/N	LOC P/N
060-0085-046	Amphenol	Radsok	4	514DA-4N	8901 SPG
060-0085-04B	Amphenol	Radsok	4	514DA-4N	8901 SPG
10-113474-4PG10	Amphenol-Bendix	PIN	4	514DA-4N	10720 SPG
10-229192-4F	Amphenol-Bendix	PIN	4	514DA-4N	
10-229193-4F	amphenol-Bendix	SKT	4	514DA-4N	
10-497101-04	Amphenol-Bendix	SKT	4	514DA-4N	
10-497223-4	Amphenol-Bendix	SKT	4	514DA-4N	5420-1
10-611100-048	Amphenol-Bendix	PIN	4	514DA-4N	
10-611101-048	Amphenol-Bendix	SKT	4	514DA-4N	
10-642692-001 PA4	Amphenol-Bendix	SKT	4	514DA-4N	10738
10-838000	Amphenol-Bendix	SKT	4	514DA-4N	10692
10/1/40564	Amphenol-Bendix	PIN	4	514DA-4N	10692
10/1/40565	Amphenol-Bendix	SKT	4	514DA-4N	10692
11404670-4F	U.S Missle Command	SKT	4	514DA-4N	
1339G4	Anderson	T	25MM	514DA-4N	10731
1650172	Tyco-Elcon	PIN	0-6	514DA-4N	5440-1
330-0190-000	CANNON	PIN	4	514DA-4N	5420-4
511-220-0404	J-TECH	PIN	4	514DA-4N	5420
512-220-0404	J-TECH	SKT	4	514DA-4N	5420
6648431-1	Amp-Tyco	SKT	4	514DA-4N	
6648434	ELCON	SKT	4	514DA-4N	
6648434-1	ELCON	SKT	4	514DA-4N	
706-0114-01107	ELCON	SKT	4	514DA-4N	5420
711-09-02107	ELCON	PIN	1/0 W/#4 W/ BARREL	514DA-4N	5440
711-10-02107	ELCON	PIN	0-6	514DA-4N	5440-1
712-81-01107	ELCON	SKT	4	514DA-4N	
CP-4004-1N	Amphenol-Bendix	PIN	4	514DA-4N	10692
cp-4104-1n	Amphenol-Bendix	SKT	4	514DA-4N	10692
CT200A-4-101	Cableco	Term	4	514DA-4N	10750-6SPG
CT500A-4-101	Cableco	Term	6	514DA-4N	10750-4SPG
HCM-779-ETC	Hypertronics	SKT	0-4	514DA-4N	5440
HCM-780-ETC	Hypertronics	PIN	0-4	514DA-4N	5440
M39029/29-215	MIL SPEC	PIN	4	514DA-4N	5420
M39029/30-221	MIL SPEC	SKT	4	514DA-4N	5420
M39029/44-292	MIL SPEC	PIN	4	514DA-4N	5420
M39029/45-299	Mil Spec	SKT	4	514DA-4N	5420
M39029/48-318	MIL SPEC	PIN	4	514DA-4N	5420-1
M39029/48-320	MIL SPEC	PIN	4	514DA-4N	5420-1
M39029/48-321	MIL SPEC	PIN	4	514DA-4N	5420-1
M39029/48-322	MIL SPEC	PIN	4	514DA-4N	5420-1
M39029/49-331	Mil Spec	SKT	4	514DA-4N	5420-1
M39029/49-332	Mil Spec	SKT	4	514DA-4N	5420-1

MANUFACTUER REFERENCE

MANF P/N	MANUFACTURER	P/S/T	SIZE	DIE P/N	LOC P/N
MS90453-4-4	MILITARY STANDARD		4	514DA-4N	5420
MS90454-4-4	MILITARY STANDARD		4	514DA-4N	5420
MS90559-10	MILITARY STANDARD		4N	514DA-4N	5420-1
MS90559-13	MILITARY STANDARD		4G	514DA-4N	5420-1
MS90559-8	MILITARY STANDARD		4	514DA-4N	5420-1
MS90559-9	MILITARY STANDARD		4N	514DA-4N	5420-1
MS90560-5	MILITARY STANDARD		4	514DA-4N	5420-1
MS90560-6	MILITARY STANDARD		4	514DA-4N	5420-1
MS90560-9	MILITARY STANDARD		4G	514DA-4N	5420-1
MS90560-9	Mil Spec	SKT	4	514DA-4N	5420-1
N450674-4F	U.S Missle Command	PIN	4	514DA-4N	
PIN & Socket	G & H TECHNOLOGY	P/S	4	514DA-4N	5420-5
R12-8500-110	Spacecraft	PIN	4	514DA-4N	10632
R12-8500-110	Spacecraft	PIN	4	514DA-4N	10632Spg
R12-8522-110	Spacecraft	PIN	4	514DA-4N	10632Spg
R12-8525-110	Spacecraft	PIN	4	514DA-4N	10632Spg
R12-8526-110	Spacecraft	PIN	4	514DA-4N	10632Spg
R12-8530-110	Spacecraft	PIN	4	514DA-4N	10632Spg
R12-8535-110	Spacecraft	PIN	4	514DA-4N	10632Spg
R12-8550-110	Spacecraft	PIN	4	514DA-4N	10632Spg
R12-8562-110	Spacecraft	PIN	4	514DA-4n	10632Spg
T12-8500-510	Spacecraft	SKT	4	514DA-4N	10632Spg
T12-8522-510	Spacecraft	SKT	4	514DA-4N	10632Spg
T12-8525-510	Spacecraft	SKT	4	514DA-4N	10632Spg
T12-8526-510	Spacecraft	SKT	4	514DA-4N	10632Spg
T12-8526-510	Spacecraft	SKT	4	514DA-4N	10632Spg
T12-8530-510	Spacecraft	SKT	4	514DA-4N	10632Spg
T12-8535-510	Spacecraft	SKT	4	514DA-4N	10632Spg
T12-8550-510	Spacecraft	SKT	4	514DA-4N	10632Spg
T12-8562-510	Spacecraft	SKT	4	514DA-4N	10632Spg
T12-8600-510	Spacecraft	SKT	4	514DA-4N	10632Spg
T12-8622-510	Spacecraft	SKT	4	514DA-4N	10632Spg
T12-8625-510	Spacecraft	SKT	4	514DA-4N	10632Spg
T12-8626-510	Spacecraft	SKT	4	514DA-4N	10632Spg
T12-8630-510	Spacecraft	SKT	4	514DA-4N	10632Spg
T12-8635-510	Spacecraft	SKT	4	514DA-4N	10632Spg
T12-8650-510	Spacecraft	SKT	4	514DA-4N	10632Spg
T12-8662-510	Spacecraft	SKT	4	514DA-4N	10632Spg
10-647323-001	Amphenol-Bendix	Post	4	514DA-4N or -4N-T	10729
10-647323-004	Amphenol-Bendix	Post	4	514DA-4N or -4N-T	10729
10-647323-005	Amphenol-Bendix	Post	4	514DA-4N or -4N-T	10729
10-647323-00B	Amphenol-Bendix	Post	4	514DA-4N or -4N-T	10729

MANUFACTUER REFERENCE

MANF P/N	MANUFACTURER	P/S/T	SIZE	DIE P/N	LOC P/N
10-647321-001	amphenol-Bendix	PIN	4	514DA-4N-T	10728
10-647321-004	amphenol-Bendix	PIN	4	514DA-4N-T	10728
10-647321-005	amphenol-Bendix	PIN	4	514DA-4N-T	10728
10-647321-00B	amphenol-Bendix	PIN	4	514DA-4N-T	10728
10-647342-001	Amphenol-Bendix	PIN	4	514DA-4N-T	10730
10-647342-004	Amphenol-Bendix	PIN	4	514DA-4N-T	10730
10-647342-005	Amphenol-Bendix	PIN	4	514DA-4N-T	10730
10-647342-00B	Amphenol-Bendix	PIN	4	514DA-4N-T	10730
1766191	Tyco-Elcon	PIN	0-6	514DA-4N220	10715
1766191-1	Tyco-Elcon	PIN	0-6	514DA-4N220	10715
1766271	Amp-Tyco	SKT	0-4	514DA-4N220	5440-8
1766271-1	Amp-Tyco	SKT	0-4	514DA-4N220	5440-8
599-361	ELCON	SKT	0-6	514DA-4N220	5440-8
6648424-1	ELCON	SKT	0-6	514DA-4N220	5440-8
712-28-01107	ELCON	SKT	0-4	514DA-4N220	5440-8
712-29-01107	ELCON	SKT	0-6	514DA-4N220	5440-8
10-838078-041	Amphenol-Bendix	SKT	4	514DA-4N280	10664
10-838078-042	Amphenol-Bendix	SKT	4	514DA-4N280	10664
10-838078-043	Amphenol-Bendix	SKT	4	514DA-4N280	10664
10-838078-044	Amphenol-Bendix	SKT	4	514DA-4N280	10664
10-838078-045	Amphenol-Bendix	SKT	4	514DA-4N280	10664
33114	Amp-Tyco	NIT	4	514DA-4NIT	5504
MS20659-112	MS	NIT	4	514DA-4NIT	5504
MS20659-132	MS	NIT	4	514DA-4NIT	5504
MS20659-144	MS	NIT	4	514DA-4NIT	5504
MS20659-145	MS	NIT	4	514DA-4NIT	5504
YAV2CL-2TC14EI-FX	BURNDY	NIT	4	514DA-4NIT-B	5504-1
YAV4C-RS	BURNDY	NIT	4	514DA-4NIT-B-90	5589
0460-204-0490	DEUTSCH	PIN	4	514DA-4SPEC	10746
0462-203-04141	Deutsch	SKT	4	514DA-4SPEC	10746
160-1050	Anderson	PIN	50MM	514DA-50 MNIT	10670-2
160-1150	Anderson	SKT	50MM	514DA-50 MNIT	10671-1
320-1050	Anderson	PIN	50MM	514DA-50 MNIT	10670-3
320-1150	Anderson	SKT	50MM	514DA-50 MNIT	10671-2
320-1095	Anderson	PIN	95MM	514DA-5615	10670-4
320-1195	Anderson	SKT	95MM	514DA-5615	10701
6356	Anderson	Term	4/0	514DA-5615	5640-1
908	Anderson	Term	4/0	514DA-5615	5615-1
50618-4/0-107FT	VEAM	PIN	4/0	514DA-5640	10604
50627-4/0-107T9	VEAM	SKT	4/0	514DA-5640	10603
50627-4/0-90T9	VEAM	SKT	4/0	514DA-5640	10603
6354	Anderson	Term	2/0	514DA-5640	10732DBL

MANUFACTUER REFERENCE

MANF P/N	MANUFACTURER	P/S/T	SIZE	DIE P/N	LOC P/N
6354-BK	Anderson	Term	2/0	514DA-5640	10732DBL
6355	Anderson	Term	3/0	514DA-5640	5640-1
907	Anderson	Term	2/0	514DA-5640	5615-1
916	Anderson	Term	3/0	514DA-5640	5615-1
1-52042-0	Amp-TYCO	IT	6	514DA-6 IT	5503
1-52042-3	Amp-TYCO	IT	6	514DA-6 IT	5503
1-52042-4	Amp-TYCO	IT	6	514DA-6 IT	5503
52042	Amp-TYCO	IT	6	514DA-6 IT	5503
52042-1	Amp-TYCO	IT	6	514DA-6 IT	5503
52042-2	Amp-TYCO	IT	6	514DA-6 IT	5503
52042-3	Amp-TYCO	IT	6	514DA-6 IT	5503
52042-4	Amp-TYCO	IT	6	514DA-6 IT	5503
52042-5	Amp-TYCO	IT	6	514DA-6 IT	5503
52042-6	Amp-TYCO	IT	6	514DA-6 IT	5503
52042-7	Amp-TYCO	IT	6	514DA-6 IT	5503
52042-9	Amp-TYCO	IT	6	514DA-6 IT	5503
8-52042-5	Amp-TYCO	IT	6	514DA-6 IT	5503
9-52042-5	Amp-TYCO	IT	6	514DA-6 IT	5503
19193-0243	Molex	NIT	6	514DA-6 NIT	5503
19193-0244	Molex	NIT	6	514DA-6 NIT	5503
19193-0245	Molex	NIT	6	514DA-6 NIT	5503
19193-0247	Molex	NIT	6	514DA-6 NIT	5503
19193-0248	Molex	NIT	6	514DA-6 NIT	5503
19193-0250	Molex	NIT	6	514DA-6 NIT	5503
19193-0250	Molex	NIT	6	514DA-6 NIT	5503
19193-0251	Molex	NIT	6	514DA-6 NIT	5503
19193-0253	Molex	NIT	6	514DA-6 NIT	5503
321598	Amp-Tyco	NIT	6	514DA-6 NIT	5503
33464	Amp-Tyco	NIT	6	514DA-6 NIT	5503-8
E-360-08	Molex	NIT	6	514DA-6 NIT	5503
E-360-08T	Molex	NIT	6	514DA-6 NIT	5503
E-360-10	Molex	NIT	6	514DA-6 NIT	5503
E-360-10T	Molex	NIT	6	514DA-6 NIT	5503
E-360-14	Molex	NIT	6	514DA-6 NIT	5503
E-360-14T	Molex	NIT	6	514DA-6 NIT	5503
E-360-56	Molex	NIT	6	514DA-6 NIT	5503
E-360-56T	Molex	NIT	6	514DA-6 NIT	5503
14-723T	ETC	NIT	6	514DA-6 NIT-B	5503
14-724T	ETC	NIT	6	514DA-6 NIT-B	5503
14-725T	ETC	NIT	6	514DA-6 NIT-B	5503
14-726T	ETC	NIT	6	514DA-6 NIT-B	5503
614TP	Ask	NIT	6	514DA-6 NIT-B	10104

MANUFACTUER REFERENCE

MANF P/N	MANUFACTURER	P/S/T	SIZE	DIE P/N	LOC P/N
6516TP	Ask	NIT	6	514DA-6 NIT-B	10104
LCA6-56-L	PANDUIT	NIT	6	514DA-6 NIT-B	10028
M346 29		NIT	6	514DA-6 NIT-B	5510-13
M346 29		NIT		514DA-6 NIT-B	5510-13
SB 350	Anderson	Term		514DA-6485	6485-1
1303G1 (P2)	Anderson	DIE	4	514DA-6486	
324046	Amp-Tyco	TERM	6	514DA-6IT	5503
324047	Amp-Tyco	TERM	6	514DA-6IT	5503
MS25036-119	MS	IT	6	514DA-6IT	5503
MS25036-120	MS	IT	6	514DA-6IT	5503
MS25036-122	MS	IT	6	514DA-6IT	5503
060-0085-061	Amphenol	Radsok	6	514DA-6N	8901 SPG
060-0085-062	Amphenol	Radsok	6	514DA-6N	8901 SPG
060-0085-0627	Amphenol	Radsok	6	514DA-6N	8901 SPG
060-0085-063	Amphenol	Radsok	6	514DA-6N	8901 SPG
060-0085-064	Amphenol	Radsok	6	514DA-6N	8901 SPG
060-0085-065	Amphenol	Radsok	6	514DA-6N	8901 SPG
060-0085-066	Amphenol	Radsok	6	514DA-6N	8901 SPG
060-0085-06B	Amphenol	Radsok	6	514DA-6N	8901 SPG
10-497101-06	Amphenol-Bendix	SKT	6	514DA-6N	
10-497222-6	Amphenol-Bendix	PIN	6	514DA-6N	5410
10-838109-061	Amphenol-Bendix	PIN	6	514DA-6N	10734
10-838109-062	Amphenol-Bendix	PIN	6	514DA-6N	10734
10-838109-063	Amphenol-Bendix	PIN	6	514DA-6N	10734
10-838109-064	Amphenol-Bendix	PIN	6	514DA-6N	10734
10-838109-065	Amphenol-Bendix	PIN	6	514DA-6N	10734
2-8465P-P2	Anderson	SKT	6	514DA-6N	10688
CT500A-6-101	Cableco	Term	6	514DA-6N	10750-3SPG
M39029/48-317	MIL SPEC	PIN	#6	514DA-6N	5410
M39029/48-318	MIL SPEC	PIN	#6	514DA-6N	5410
M39029/49-329	Mil Spec	SKT	#6	514DA-6N	5410
M39029/49-330	Mil Spec	SKT	#6	514DA-6N	5410
MS90559-11	MILITARY STANDARD		6	514DA-6N	5410
MS90559-12	MILITARY STANDARD		6N	514DA-6N	5410
MS90559-14	MILITARY STANDARD		6G	514DA-6N	5410
MS90560-7	MILITARY STANDARD		6	514DA-6N	5410
MS90560-8	MILITARY STANDARD		6G	514DA-6N	5410
10-838078-061	Amphenol-Bendix	SKT	6	514DA-6N156	
54852BEPH	T & B	Term	#6	514DA-6NIT	
MS20659-109	MS	NIT	6	514DA-6NIT	5503
MS20659-110	MS	NIT	6	514DA-6NIT	5503
MS20659-130	MS	NIT	6	514DA-6NIT	5503

MANUFACTUER REFERENCE

MANF P/N	MANUFACTURER	P/S/T	SIZE	DIE P/N	LOC P/N
MS20659-131	MS	NIT	6	514DA-6NIT	5503
MS20659-143	MS	NIT	6	514DA-6NIT	5503
YAV4CL-2TC38-FX	BURNDY	NIT	#6	514DA-6NIT-B	5503-1
YAV4CL-2TC38-FX90	BURNDY	NIT	#6	514DA-6NIT-B	5503-1
YAV6CL-2TC14-FX	BURNDY	NIT	#6	514DA-6NIT-B	5503-1
YAV6CL-2TC14-FX90	BURNDY	NIT	#6	514DA-6NIT-B	5503-1
YPN060-003H	Hypertronics	PIN	6	514DA-6NMOD	10737
YSK060-010AH	Hypertronics	SKT	6	514DA-6NMOD	10737
1303G11 (P22)	ANDERSON	DIE	70MM	514DA-70 MNIT	
1303G6 (P11)	Anderson	DIE	10/12/2008	514DA-7033	
1766273	ELCON	PIN	0-8	514DA-7033	10663
1766273-1	ELCON	PIN	0-8	514DA-7033	10663
5915	Anderson	Term	10/12/2008	514DA-7033	7033-1
711-11-02107	ELCON	PIN	0-8	514DA-7033	10663
712-30-01107	ELCON	SKT	0-8	514DA-7033	5440
904G1	Anderson	NIT	10/12/2008	514DA-7033	7033-1
647877-1	Amp-Tyco	Term		514DA-7033 or 514DA-8NIT-B	7033-1 or 7034-1
647878-1	Amp-Tyco	Term		514DA-7033 or 514DA-8NIT-B	7033-1 or 7034-1
1303G5 (P10)	Anderson	DIE	6/8/2008	514DA-7034	
1339G2	ANDERSON	TERM	# 6	514DA-7034	7034-1
1388G7 (P8)	ANDERSON	DIE	10/12/2008	514DA-7034	7034-1
5900	ANDERSON	Term	# 6	514DA-7034	7034-1
5952	ANDERSON	Term	6/8/2008	514DA-7034	7034-1
903G1	Anderson	NIT	8/16/2008	514DA-7034	7034-1
647879-1	Amp-Tyco	Term		514DA-7034 or 514DA-8N	7033-1 or 7034-1
1319	Anderson	NIT	2/8/2008	514DA-7035	7035-1
1319G4	Anderson	NIT	2/8/2008	514DA-7035	7035-1
1445995-1	Amp-Tyco	P/T	4	514DA-7035	7035-1
1445996-1	Amp-Tyco	P/T	4	514DA-7035	7035-1
1445997-1	Amp-Tyco	P/T	4	514DA-7035	7035-1
114149P5	Anderson			514DA-7036	
1303G4 (P5)	Anderson	DIE	4	514DA-7036	
1341G1	Anderson	Term	50MM	514DA-7036	10733DBL
1384	Anderson	Term	4	514DA-7036	7036-1
948	anderson	Term	4	514DA-7036	7036-1
STC906-4	SMH	T	4	514DA-7036	10052
917	ANDERSON	PIN	1/0	514DA-7036M	5640
917	Anderson	Term	0	514DA-7036M	5640-DC
917	ANDERSON	PIN	1/0	514DA-7036M	5640
10-838109-041	Amphenol-Bendix	PIN	4	514DA-7037	10734

MANUFACTUER REFERENCE

MANF P/N	MANUFACTURER	P/S/T	SIZE	DIE P/N	LOC P/N
10-838109-042	Amphenol-Bendix	PIN	4	514DA-7037	10734
10-838109-043	Amphenol-Bendix	PIN	4	514DA-7037	10734
10-838109-044	Amphenol-Bendix	PIN	4	514DA-7037	10734
10-838109-045	Amphenol-Bendix	PIN	4	514DA-7037	10734
2-8465P-P1	Anderson	SKT	2	514DA-7037	10687
6384G1	Anderson	NIT	1/0	514DA-7037	7037-1
944	Anderson	Term	1/0	514DA-7037	7037-1
B00784P6	ANDERSON	PIN	4/1/2008	514DA-7037	7037-2
320-1170	Anderson	SKT	70MM	514DA-70MNIT	10671-1
52263	Amp-TYCO	IT	8	514DA-8 IT	5502
52263--3	Amp-TYCO	IT	8	514DA-8 IT	5502
52263--4	Amp-TYCO	IT	8	514DA-8 IT	5502
52263--5	Amp-TYCO	IT	8	514DA-8 IT	5502
52263--6	Amp-TYCO	IT	8	514DA-8 IT	5502
52263-2	Amp-TYCO	IT	8	514DA-8 IT	5502
52263-3	Amp-TYCO	IT	8	514DA-8 IT	5502
2-33461-1	Amp-TYCO	NIT	8	514DA-8 NIT	5502
2-33461-2	Amp-TYCO	NIT	8	514DA-8 NIT	5502
2-33461-3	Amp-TYCO	NIT	8	514DA-8 NIT	5502
324061	Amp-Tyco	NIT	#8	514DA-8 NIT	5502
33461	Amp-TYCO	NIT	8	514DA-8 NIT	5502
33462	Amp-Tyco	NIT	8	514DA-8 NIT	5502
33463	Amp-Tyco	NIT	8	514DA-8 NIT	5502
8-33461-1	Amp-TYCO	NIT	8	514DA-8 NIT	5502
D10161	T & B	NIT	8	514DA-8 NIT-B	5502-3
YA8CL-2TC14E1	BURNDY	NIT	# 8	514DA-8 NIT-B	5502-1
N50025	ESC	Ferrule	1/0	514DA-8022	8022
324043	Amp-Tyco	TERM	#8	514DA-8IT	5502
330600	Amp-Tyco	T	8 gage insu-lated	514da-8IT	5502
MS25036-115	MS	IT	8	514DA-8IT	5502
MS25036-116	MS	IT	8	514DA-8IT	5502
MS25036-117	MS	IT	8	514DA-8IT	5502
MS25036-118	MS	IT	8	514DA-8IT	5502
031-0500-000	CANNON	SKT	8	514DA-8N	5400-4
031-3116-003	CANNON	SKT	8	514DA-8N	5400
031-8519-000	CANNON	SKT	8	514DA-8N	
031-8519-005	CANNON	SKT	8	514DA-8N	
031-8519-010	CANNON	SKT	8	514DA-8N	
031-8519-015	CANNON	SKT	8	514DA-8N	
031-8559-000	CANNON	SKT	8	514DA-8N	
031-8559-005	CANNON	SKT	8	514DA-8N	
060-0085-081	Amphenol	Radsok	8	514DA-8N	8901 SPG

MANUFACTUER REFERENCE

MANF P/N	MANUFACTURER	P/S/T	SIZE	DIE P/N	LOC P/N
060-0085-082	Amphenol	Radsok	8	514DA-8N	8901 SPG
060-0085-0827	Amphenol	Radsok	8	514DA-8N	8901 SPG
060-0085-083	Amphenol	Radsok	8	514DA-8N	8901 SPG
060-0085-084	Amphenol	Radsok	8	514DA-8N	8901 SPG
060-0085-085	Amphenol	Radsok	8	514DA-8N	8901 SPG
060-0085-086	Amphenol	Radsok	8	514DA-8N	8901 SPG
060-0085-08B	Amphenol	Radsok	8	514DA-8N	8901 SPG
060-0085-101	Amphenol	Radsok	10	514DA-8N	8901 SPG
060-0085-102	Amphenol	Radsok	10	514DA-8N	8901 SPG
060-0085-1027	Amphenol	Radsok	10	514DA-8N	8901 SPG
060-0085-103	Amphenol	Radsok	10	514DA-8N	8901 SPG
060-0085-104	Amphenol	Radsok	10	514DA-8N	8901 SPG
060-0085-105	Amphenol	Radsok	10	514DA-8N	8901 SPG
060-0085-106	Amphenol	Radsok	10	514DA-8N	8901 SPG
060-0085-10B	Amphenol	Radsok	10	514DA-8N	8901 SPG
060-0085-121	Amphenol	Radsok	12	514DA-8N	8901 SPG
060-0085-122	Amphenol	Radsok	12	514DA-8N	8901 SPG
060-0085-1227	Amphenol	Radsok	12	514DA-8N	8901 SPG
060-0085-123	Amphenol	Radsok	12	514DA-8N	8901 SPG
060-0085-124	Amphenol	Radsok	12	514DA-8N	8901 SPG
060-0085-125	Amphenol	Radsok	12	514DA-8N	8901 SPG
060-0085-126	Amphenol	Radsok	12	514DA-8N	8901 SPG
060-0085-12B	Amphenol	Radsok	12	514DA-8N	8901 SPG
10-611100-088	Amphenol-Bendix	PIN	8	514DA-8N	
10-611101-088	Amphenol-Bendix	SKT	8	514DA-8N	
10-639023-081	Amphenol	Hilok PIN	8	514DA-8N	8902 SPG
10-639023-082	Amphenol	Hilok PIN	8	514DA-8N	8902 SPG
10-639023-083	Amphenol	Hilok PIN	8	514DA-8N	8902 SPG
10-639023-084	Amphenol	Hilok PIN	8	514DA-8N	8902 SPG
10-639023-085	Amphenol	Hilok PIN	8	514DA-8N	8902 SPG
10-639023-086	Amphenol	Hilok PIN	8	514DA-8N	8902 SPG
10-639023-08B	Amphenol	Hilok PIN	8	514DA-8N	8902 SPG
10-639023-101	Amphenol	Hilok PIN	10	514DA-8N	8902 SPG
10-639023-102	Amphenol	Hilok PIN	10	514DA-8N	8902 SPG
10-639023-103	Amphenol	Hilok PIN	10	514DA-8N	8902 SPG
10-639023-104	Amphenol	Hilok PIN	10	514DA-8N	8902 SPG
10-639023-105	Amphenol	Hilok PIN	10	514DA-8N	8902 SPG
10-639023-106	Amphenol	Hilok PIN	10	514DA-8N	8902 SPG
10-639023-10B	Amphenol	Hilok PIN	10	514DA-8N	8902 SPG
10-639023-121	Amphenol	Hilok PIN	12	514DA-8N	8902 SPG
10-639023-122	Amphenol	Hilok PIN	12	514DA-8N	8902 SPG
10-639023-123	Amphenol	Hilok PIN	12	514DA-8N	8902 SPG
10-639023-124	Amphenol	Hilok PIN	12	514DA-8N	8902 SPG

MANUFACTUER REFERENCE

MANF P/N	MANUFACTURER	P/S/T	SIZE	DIE P/N	LOC P/N
10-639023-125	Amphenol	Hilok PIN	12	514DA-8N	8902 SPG
10-639023-126	Amphenol	Hilok PIN	12	514DA-8N	8902 SPG
10-639023-12B	Amphenol	Hilok PIN	12	514DA-8N	8902 SPG
27935-T12	Veam	SKT	8	514DA-8N	5404
511-220-0808	J-TECH	PIN	8	514DA-8N	5400
512-220-0808	J-TECH	SKT	8	514DA-8N	5400
701-0117-02107	Elcon-Tyco	PIN	10/8/2008	514DA-8N	
BACC47DP3	BOEING	PIN	#8	514DA-8N	5400
BACC47DP3	BOEING	PIN	#8	514DA-8N	5400
CT500A-8-101	Cableco	Term	8	514DA-8N	10750-2SPG
DC64-8P	MATRIX	P	8GA	514DA-8N	5400-5
DC65-8S	Boeing		8	514DA-8N	5486
M39029/29-214	MIL SPEC	PIN	#8	514DA-8N	5400
M39029/44-291	MIL SPEC	PIN	8	514DA-8N	5400
M39029/45-298	Mil Spec	SKT	#8	514DA-8N	5400
MS90454-8-8	MILITARY STANDARD		8	514DA-8N	5400
MS90454-8-8	MILITARY STANDARD		8	514DA-8N	5400
27915-T9	Veam	PIN	8	514DA-8N	5404
27915	VEAM	PIN	8	514DA-8N or 8 ex	5404
27915-T12	Veam	PIN	8	514DA-8N or 8 Hex	5404
27935	VEAM	SKT	8	514DA-8n or 8Hex	5404
MS20659-107	MS	NIT	8	514DA-8NIT	5502
MS20659-108	MS	NIT	8	514DA-8NIT	5502
MS20659-129	MS	NIT	8	514DA-8NIT	5502
MS20659-140	MS	NIT	8	514DA-8NIT	5502
MS20659-141	MS	NIT	8	514DA-8NIT	5502
MS20659-141	MS	NIT	8	514DA-8NIT	5502
MS20659-142	MS	NIT	8	514DA-8NIT	5502
7056713	Army Tank Command	Term	#8	514DA-8NIT-5700-3	5700-2 & -3
7056714	Army Tank Command	Term	#8	514DA-8NIT-5700-3	5700-2 & -3
YA8CL-2CT14EI	BURNDY	NIT	#8	514DA-8NIT-B	5502-1
80-1116	anderson	SKT	16mm	514DA-MNIT	10670-1
27936-90	VEAM	SKT	O w/35mmsq ww	514DA-O HEX	10619
RH727	T & B	IT	1/0	514DA-O IT-B	5510-3
0-1648418-1	ELCON-TYCO	SKT	0	514DA-ON	5440
031-8521-010	CANNON	SKT	0-4	514DA-ON	10686
10-606015-48	Amphenol-Bendix	SKT	2/0	514DA-ON	10676-1
6648418-1	ELCON-TYCO	SKT	0	514DA-ON	5440
711-01-02107	ELCON	PIN	0	514DA-ON	5440
711-05-02107	ELCON	PIN	0	514DA-ON	5440
712-01-01107	ELCON	SKT	0	514DA-ON	5440
712-09-01107	ELCON	SKT	0	514DA-ON	5440
712-09-01107	ELCON-TYCO	SKT	0	514DA-ON	5440

MANUFACTUER REFERENCE

MANF P/N	MANUFACTURER	P/S/T	SIZE	DIE P/N	LOC P/N
51247-90T9	VEAM	SKT	1/0	514DA-ON or Hex	10649
19193-0325	Molex-ETC	T	1/0	514DA-ONIT	5510-2
19193-0331	Molex-ETC	T	1/0	514DA-ONIT	5510-2
MS20659-135	MS	NIT	0	514DA-ONIT	5510-2
MS20659-151	MS	NIT	0	514DA-ONIT	5510-2
MS20659-152	MS	NIT	0	514DA-ONIT	5510-2
5065-246-0808	Aero Electric	SKT	8	5400	
5065-246-0808	Consys	SKT	8	5400	
5065-246-0812	Consys	SKT	8/12/2008	5400	
5065-246-0812	Aero Electric	SKT	8/12/2008	5400	
YAEV8C-L14	Burndy	IT	8	5502-1	
1319G6	ANDERSON	NIT		7035-1	
3661702	Solid State Stamping	open barrel		No	
3661702	Sunstone Sales	open barrel		No	
CA15582	MOOG	stud	2/0	TBD .200-.220	

AWM Weidner
Kettemerstr. 25
70794 Filderstadt
Germany
Tel.: 0711 7009503
Fax: 0711 7009504
info@awm-weidner.de
www.awm-weidner.de